R2J20658BNP

Integrated Driver - MOS FET (DrMOS)

R07DS0550EJ0101
(Previous No.: R07DS0542EJ0100)
Rev.1.01
Sep 30, 2011

Description

The R2J20658BNP multi-chip module incorporates a high-side MOS FET, low-side MOS FET, and MOS-FET driver in a single QFN package. The on and off timing of the power MOS FET is optimized by the built-in driver, making this device suitable for large-current buck converters. The chip also incorporates a high-side bootstrap switch, eliminating the need for an external SBD for this purpose.

Features

- Based on Intel 6 × 6 DrMOS Specification.
- Built-in power MOS FET suitable for Desktop, Server application.
- Low-side MOS FET with built-in SBD for lower loss and reduced ringing.
- Built-in driver circuit which matches the power MOS FET
- Built-in tri-state input function which can support a number of PWM controllers
- High-frequency operation (above 1 MHz) possible
- VIN operating-voltage range: 20 Vmax
- Large average output current (Max.40 A)
- Achieve low power dissipation
- Controllable driver: Remote on/off
- Support Mid-Voltage PWM signal to enter zero current detection
- Double thermal protection: Thermal Warning & Thermal Shutdown
- Built-in bootstrapping Switch
- Small package: QFN40 (6 mm × 6 mm × 0.95 mm)
- Pb-free/Halogen-free

Outline

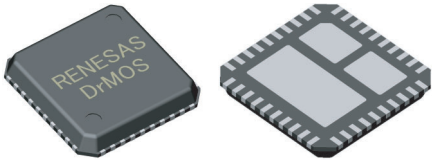

Integrated Driver-MOS FET (DrMOS)
QFN40 package 6 mm × 6 mm

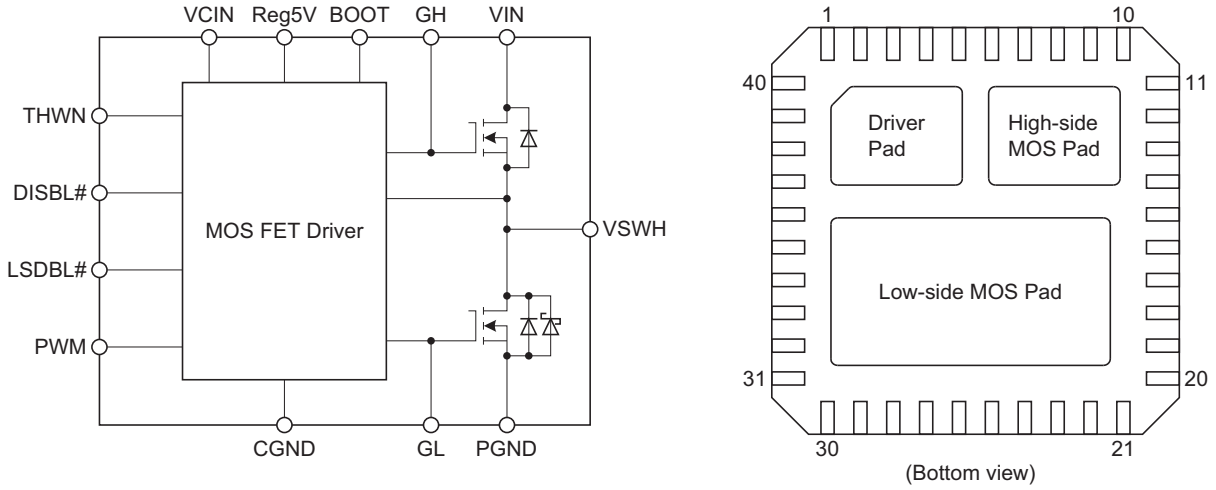

Block Diagram

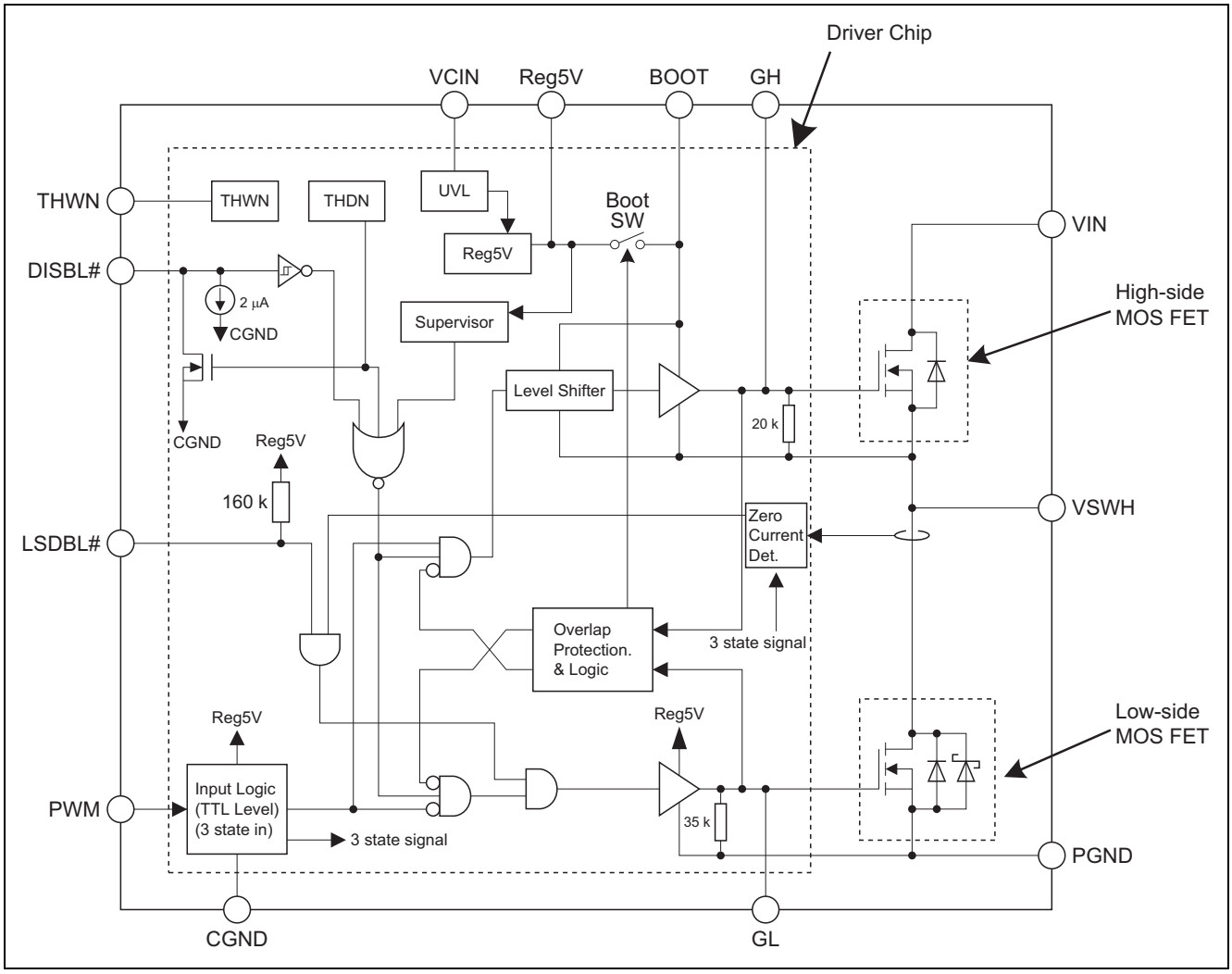

Notes: 1. Truth table for the DISBL# pin

DISBL# Input	Driver Chip Status
"L"	Shutdown (GL, GH = "L")
"Open"	Shutdown (GL, GH = "L")
"H"	Enable (GL, GH = "Active")

2. Truth table for the LSDBL# pin

LSDBL# Input	PWM Input	GL Status
"L"	*	"L"
"Open" or "H"	"L" or "H"	"Continuous Conduction Mode"
	"Open" or "Mid"	"Zero Current Detection" Mode

3. Output signal from the UVL block

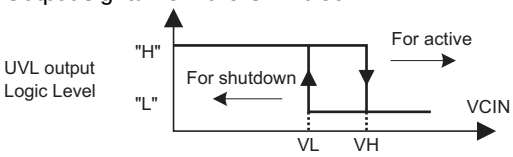

4. Output signal from the THWN block

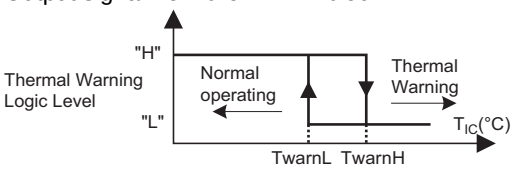

5. Truth table for the THDN block

Driver IC Temp.	Driver Chip Status
< 150°C	Enable (GL, GH = "Active")
> 150°C	Shutdown (GL, GH = "L") (latch-off)

Pin Arrangement

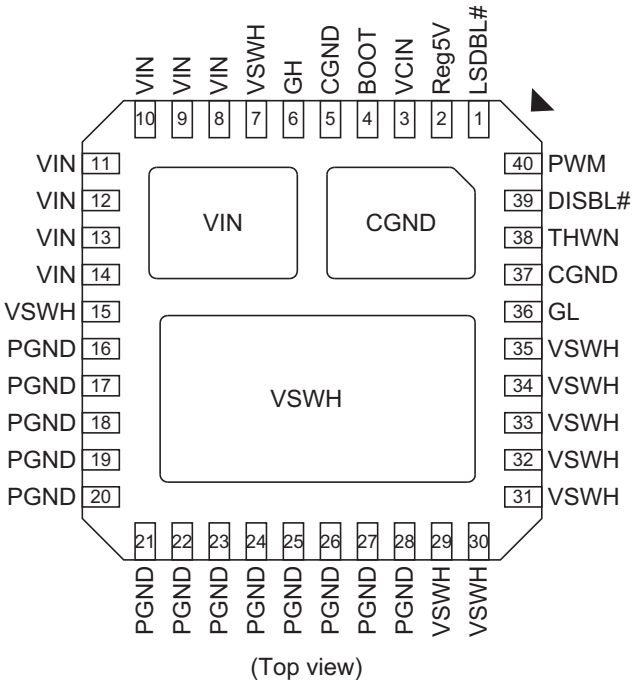

Note: All die-pads (three pads in total) should be soldered to PCB.

Pin Description

Pin Name	Pin No.	Description	Remarks
LSDBL#	1	Low-side gate disable	When asserted "L" signal, Low-side gate disable
Reg5V	2	+5 V logic power supply output	
VCIN	3	Control input voltage	Driver Vcc input
BOOT	4	Bootstrap voltage pin	To be supplied +5 V through internal switch
CGND	5, 37, Pad	Control signal ground	Should be connected to PGND externally
GH	6	High-side gate signal	Pin for monitor
VIN	8 to 14, Pad	Input voltage	
VSWH	7, 15, 29 to 35, Pad	Phase output/Switch output	
PGND	16 to 28	Power ground	
GL	36	Low-side gate signal	Pin for monitor
THWN	38	Thermal warning	Thermal warning when over 115°C
DISBL#	39	Signal disable	Disabled when DISBL# is "L". This Pin is pulled low when internal IC over the thermal shutdown level, 150°C.
PWM	40	PWM drive logic input	5 V logic input

Absolute Maximum Ratings

(Ta = 25°C)

Item	Symbol	Rating	Units	Note
Power dissipation	Pt(25)	25	W	1
	Pt(110)	8		
Average output current	Iout	40	A	
Input voltage	VIN(DC)	–0.3 to +20	V	2
	VIN(AC)	30		2, 4, 6
Switch node voltage	VSWH(DC)	20	V	2
	VSWH(AC)	30		2, 4, 6
BOOT voltage	VBOOT(DC)	25	V	2
	VBOOT(AC)	36		2, 4, 6
Supply voltage	VCIN	–0.3 to +27	V	2
PWM voltage	Vpwm	–0.3 to +5.5 @UVL OFF –0.3 to +0.3 @UVL ON –0.3 to Reg5V + 0.3	V	2, 4 2, 5 2, 7, 8
Other I/O voltage	Vdisbl, Vlsdbl	–0.3 to VCIN + 0.3	V	2
Reg5V voltage	Vreg5V	–0.3 to +6	V	2, 7
Reg5V current	Ireg5V	–20 to +0.1	mA	3
THWN/THDN current	Ithwn, Idisbl	0 to 1.0	mA	3
Operating junction temperature	Tj-opr	–40 to +150	°C	
Storage temperature	Tstg	–55 to +150	°C	

Notes: 1. Pt(25) represents a PCB temperature of 25°C, and Pt(110) represents 110°C.
2. Rated voltages are relative to voltages on the CGND and PGND pins.
3. For rated current, (+) indicates inflow to the chip and (–) indicates outflow.
4. This rating is when UVL (Under Voltage Lock out) is ineffective (normal operation mode).
5. This rating is when UVL (Under Voltage Lock out) is effective (lock out mode).
6. The specification values indicated "AC" is limited within 10 ns.
7. This rating is when the external power-source is applied to Reg5V pin.
8. Reg5V + 0.3 V < 6 V

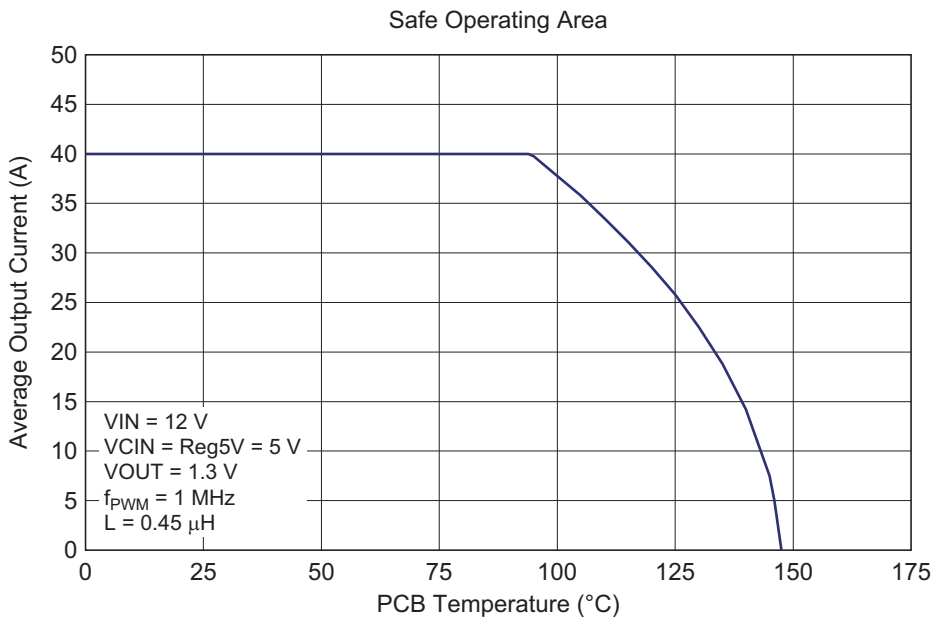

Recommended Operating Condition

Item	Symbol	Rating	Units	Note
Input voltage	VIN	4.5 to 16	V	When the usage of VCIN = 4.5 V to 5.5 V, VCIN should be connected to Reg5V (Refer to "Pin Connection")
Supply voltage & Drive voltage	VCIN	4.5 to 5.5 or 8 to 22	V	

Electrical Characteristics

(Ta = 25°C, VCIN = 12 V, VSWH = 0 V, unless otherwise specified)

Item		Symbol	Min	Typ	Max	Units	Test Conditions
Supply	VCIN start threshold	V_H	7.0	7.4	7.8	V	
	VCIN shutdown threshold	V_L	6.6	7.0	7.4	V	
	UVLO hysteresis	dUVL	—	0.4	—	V	$V_H – V_L$
	VCIN operating current	I_{CIN}	—	43	—	mA	f_{PWM} = 1 MHz, Ton_pwm = 120 ns
	VCIN disable current	$I_{CIN-DISBL}$	—	—	1.2	mA	DISBL# = 0 V, PWM = LSDBL# = Open
PWM input	PWM input high level	V_{H-PWM}	4.1	—	—	V	5.0 V PWM interface
	PWM input low level	V_{L-PWM}	—	—	0.8	V	
	PWM input resistance	R_{IN-PWM}	3.5	7.5	15	kΩ	$\frac{4V – 1V}{I_{PWM}(V_{PWM=4V}) – I_{PWM}(V_{PWM=1V})}$
	PWM input tri-state range	V_{IN-tri}	1.4	—	3.3	V	5.0 V PWM interface
DISBL# input	Enable level	V_{ENBL}	2.0	—	—	V	
	Disable level	V_{DISBL}	—	—	0.8	V	
	Input current	I_{DISBL}	—	2.0	5.0	μA	DISBL# = 1 V
	THDN on resistance	R_{THDN} *1	0.2	0.5	1.0	kΩ	THDN = 0.2 V
LSDBL# input	Low-side activation level	V_{LSDBLH}	2.0	—	—	V	
	Low-side disable level	V_{LSDBLL}	—	—	0.8	V	
	Input current	I_{LSDBL}	–52	–26	–12	μA	LSDBL# = 1 V
Thermal warning	Warning temperature	T_{THWN} *1	100	115	130	°C	Driver IC temperature
	Temperature hysteresis	T_{HYS} *1	—	15	—	°C	
	THWN on resistance	R_{THWN} *1	0.2	0.5	1.0	kΩ	THWN = 0.2 V
	THWN leakage current	I_{LEAK}	—	—	1.0	μA	THWN = 5 V
Thermal shutdown	Shutdown temperature	Tstdn *1	130	150	—	°C	Driver IC temperature
5 V regulator	Output voltage	Vreg	4.95	5.2	5.45	V	
	Line regulation	Vreg-line	–10	0	10	mV	VCIN = 12 V to 16 V
	Load regulation	Vreg-load	–10	0	10	mV	Ireg = 0 to 10 mA

Note: 1. Reference values for design. Not 100% tested in production.

Typical Application

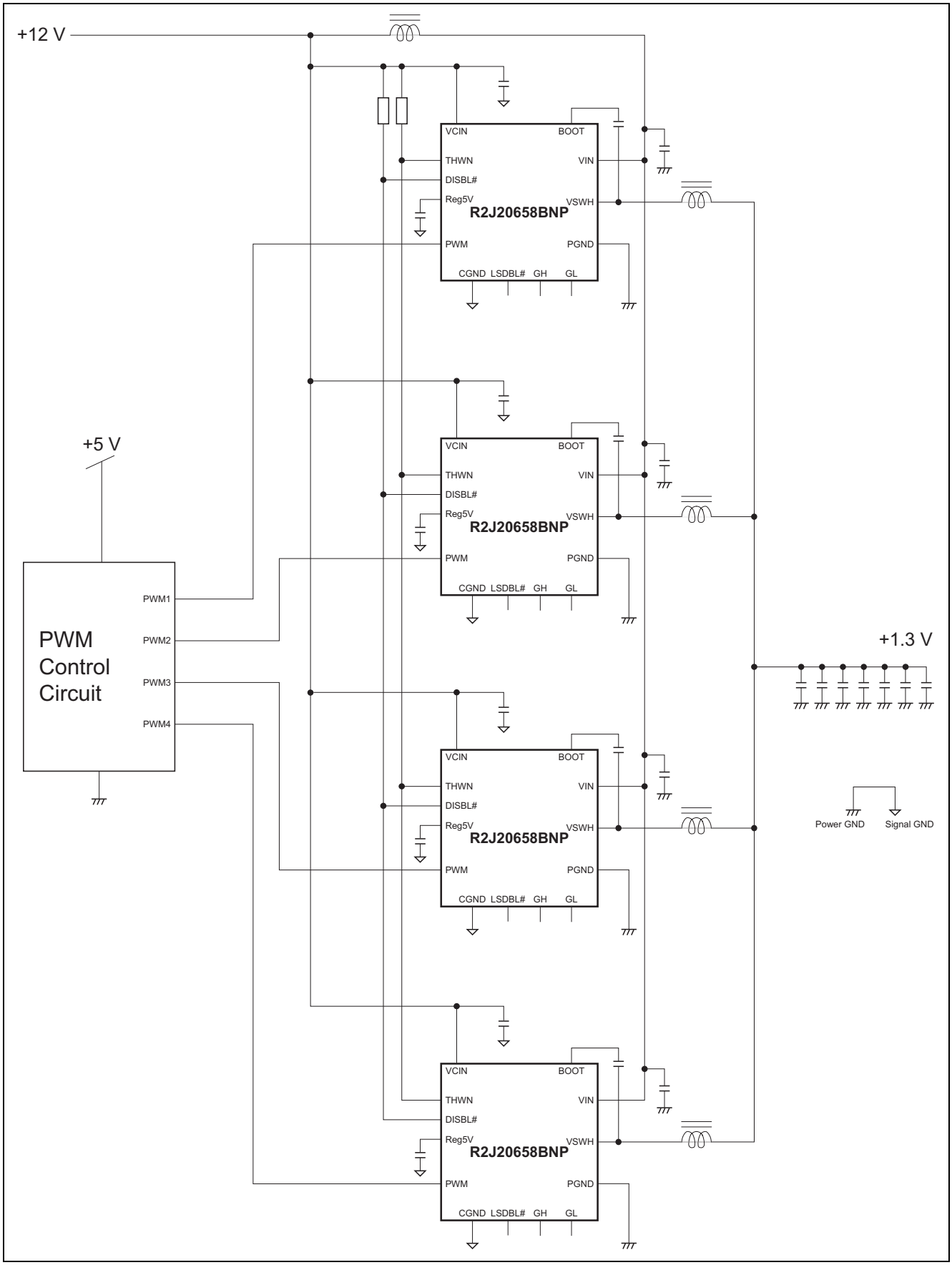

Pin Connection

(1) Single 12 V Application

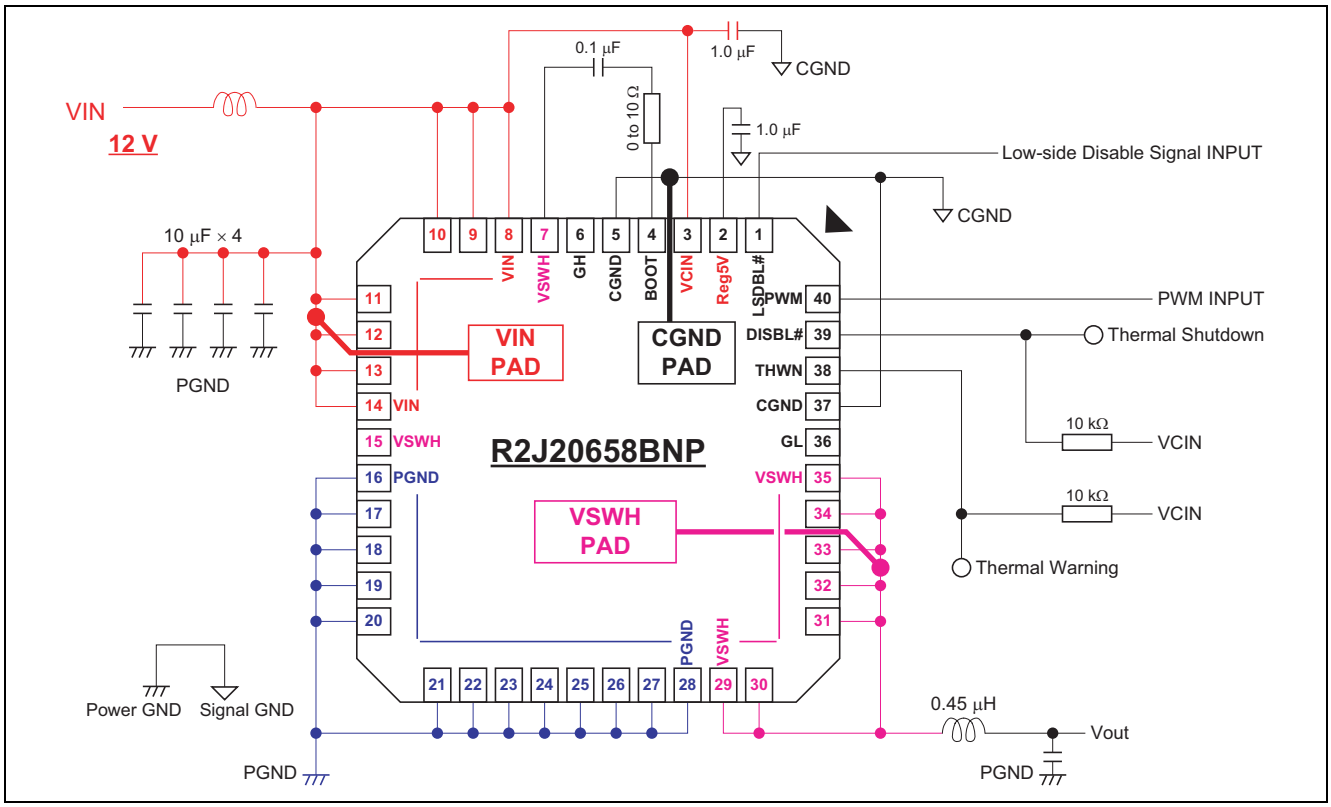

(2) VCIN 5 V Application

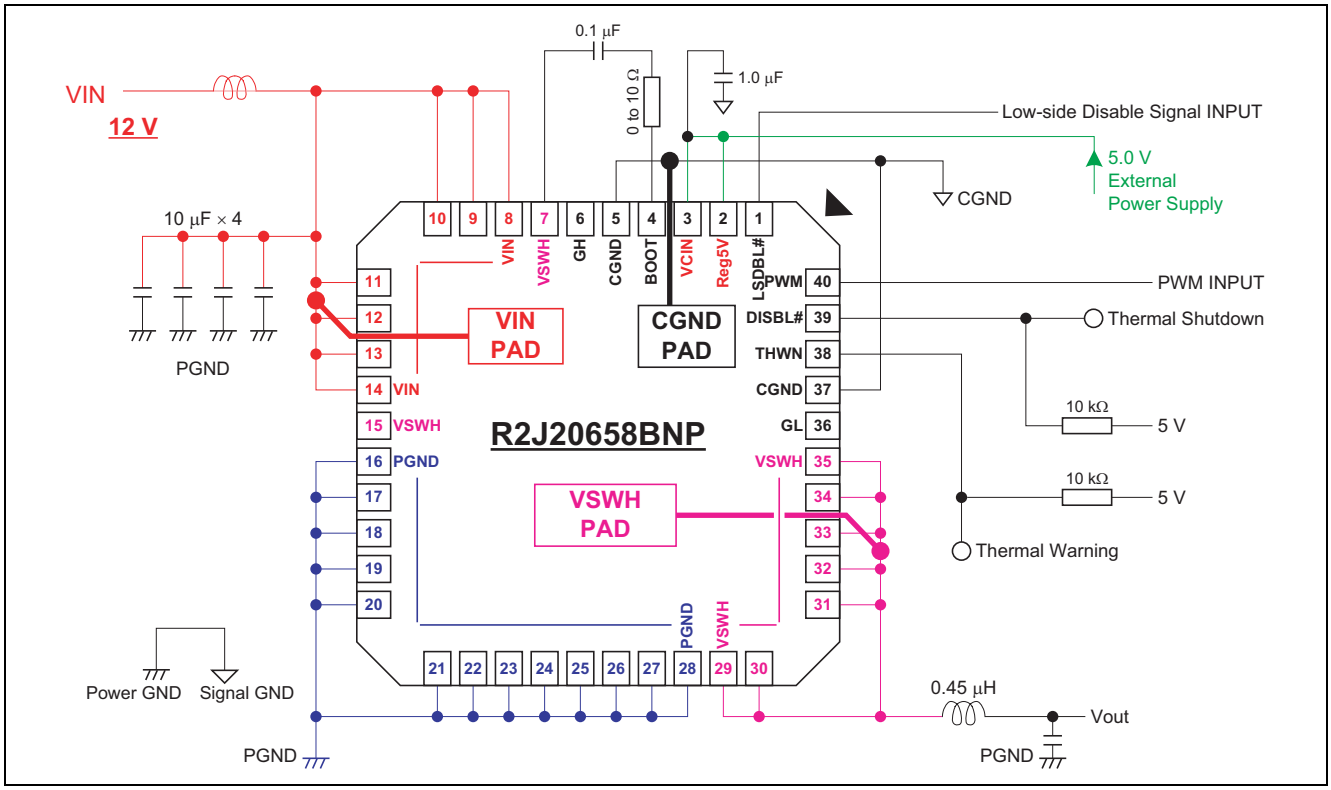

Test Circuit

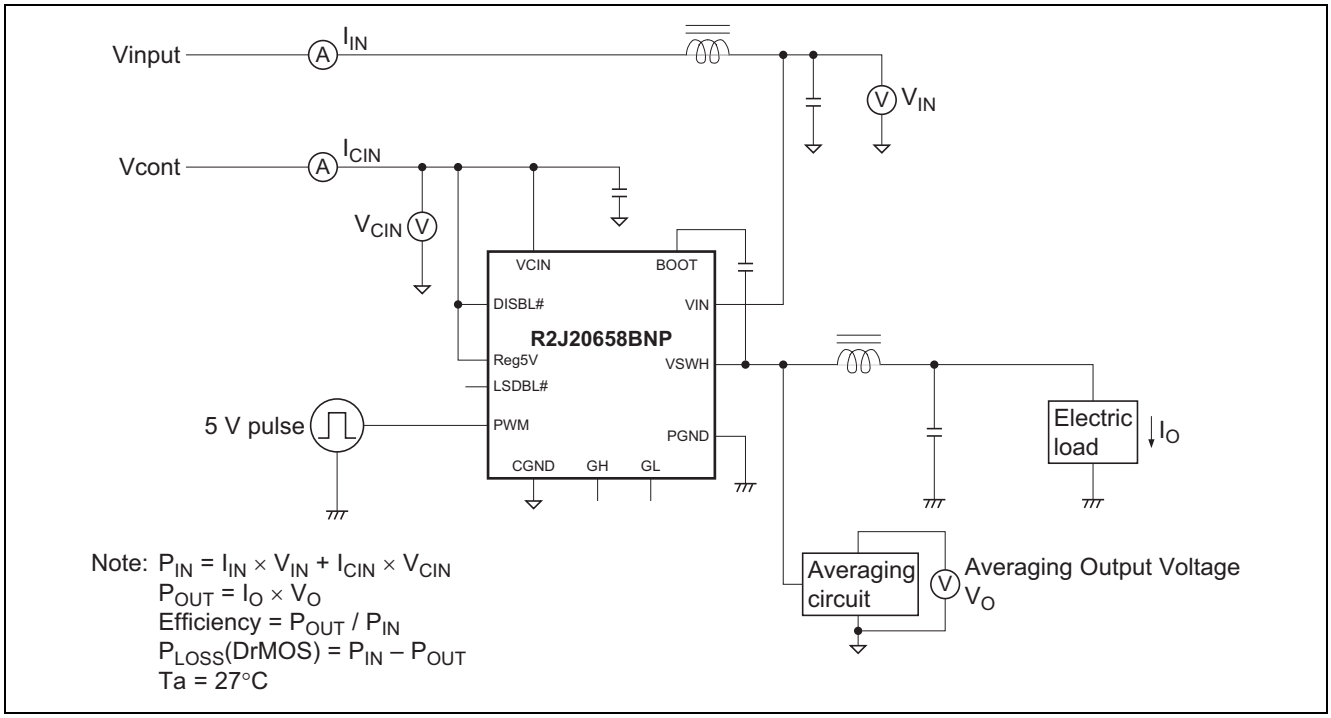

Typical Data

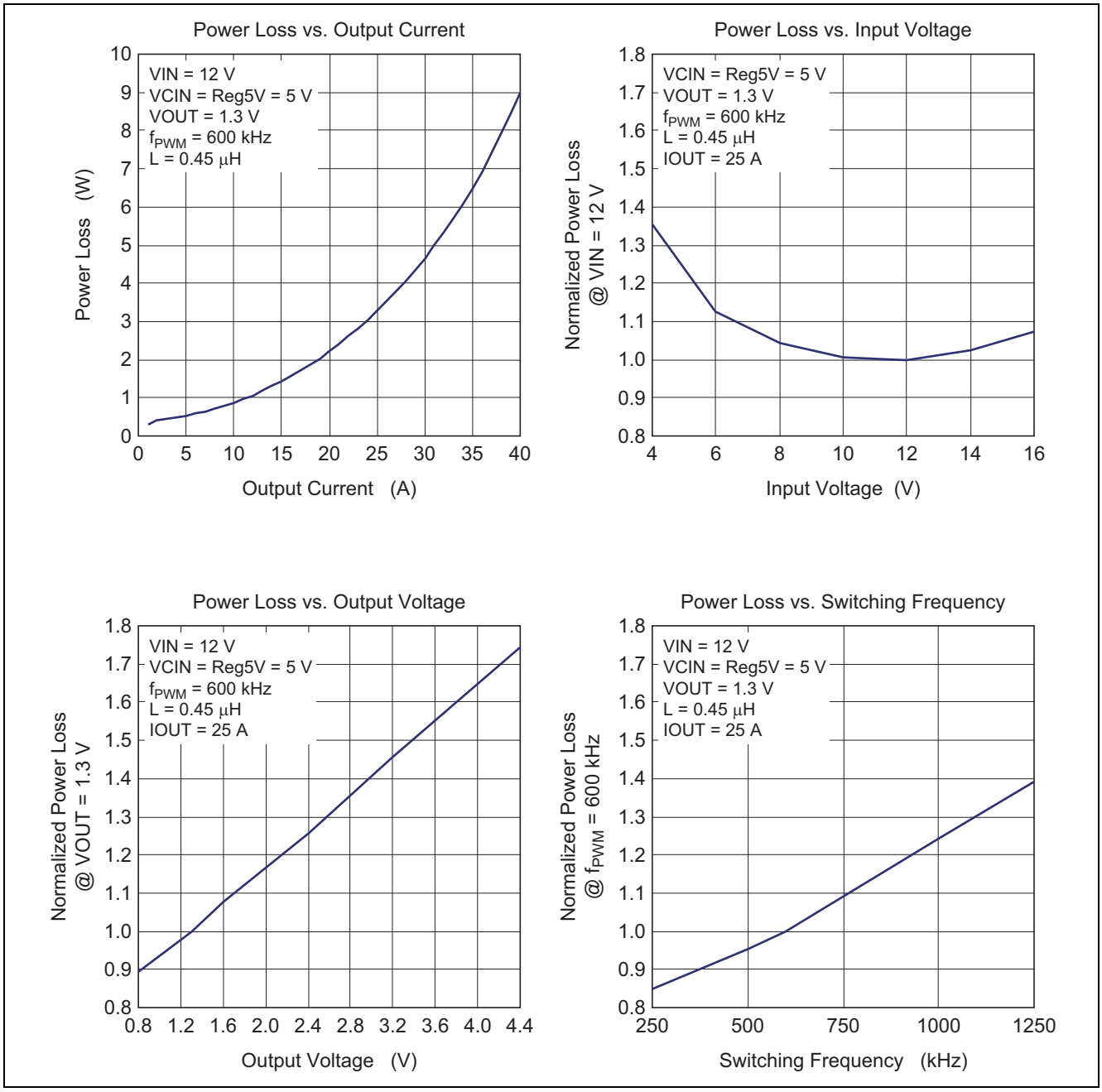

Typical Data (cont.)

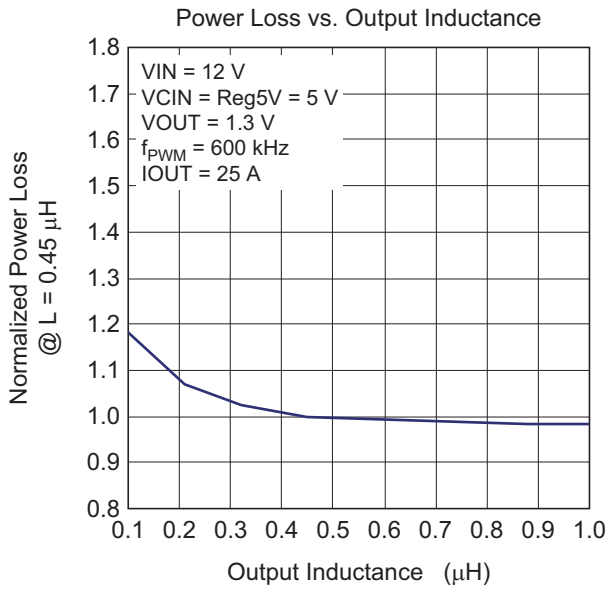

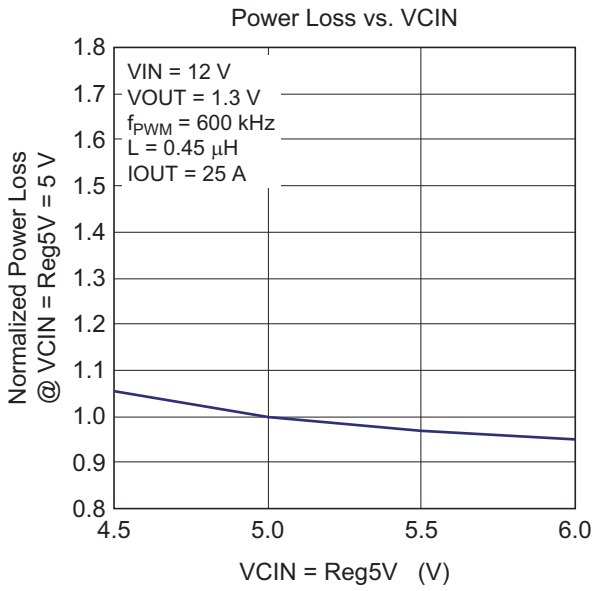

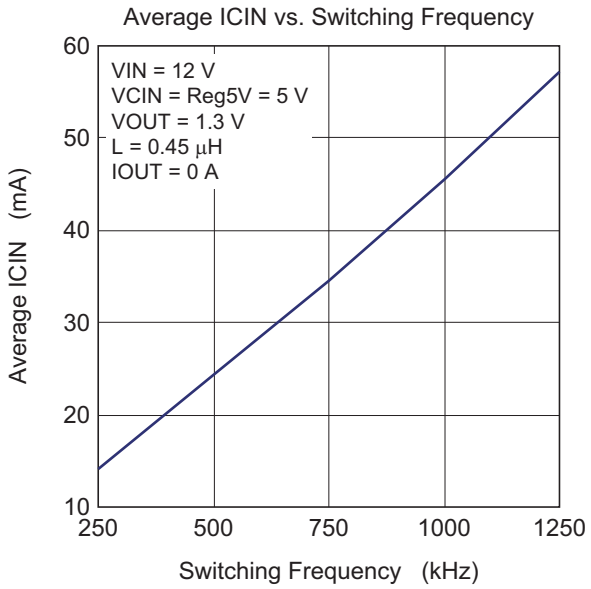

Description of Operation

The DrMOS multi-chip module incorporates a high-side MOS FET, low-side MOS FET, and MOS-FET driver in a single QFN package. Since the parasitic inductance between each chip is extremely small, the module is highly suitable for use in buck converters to be operated at high frequencies. The control timing between the high-side MOS FET, low-side MOS FET, and driver is optimized so that high efficiency can be obtained at low output-voltage.

VCIN & DISBL#

The VCIN pin is connected to the UVL (under-voltage lockout) module, so that the built-in 5 V regulator is disabled as long as VCIN is 7.4 V or less. On cancellation of UVL, the built-in 5 V regulator remains enabled until the UVL input is driven to 7.0 V or less.

The built-in 5 V regulator is a series regulator with temperature compensation. A ceramic capacitor with a value of 0.1 μF or more must be connected between the CGND plane and the Reg5V pin.

The output of 5 V regulator is monitored by the internal Supervisor circuits. When the Supervisor detects this output is more than 4.3 V (typ.), the driver state becomes active (figure 1.1). Supervisor circuit has hysteresis and its shutdown level of Supervisor is 3.8 V (typ.).

Figure 1.2 shows the application when the external 5 V regulator is used. When the Reg5V pin is applied into external 5 V, the Supervisor can activate the driver. In this application usage, VCIN should be connected to Reg5V.

The signal on pin DISBL# also enables or disables the circuit. When UVL disables the circuit, the built-in 5 V regulator does not operate, but when the signal on DISBL# disables the circuit, only output-pulse generation is terminated, and the 5 V regulator is not disabled.

Voltages from –0.3 V to VCIN+0.3 V can be applied to the DISBL# pin, so on/off control by a logic IC or the use of a resistor, etc., to pull the DISBL# line up to VCIN are both possible.

VCIN	DISBL#	Reg5V	Driver State
L	*	0	Disable (GL, GH = L)
H	L	Active	Disable (GL, GH = L)
H	H	Active	Active
H	Open	Active	Disable (GL, GH = L)

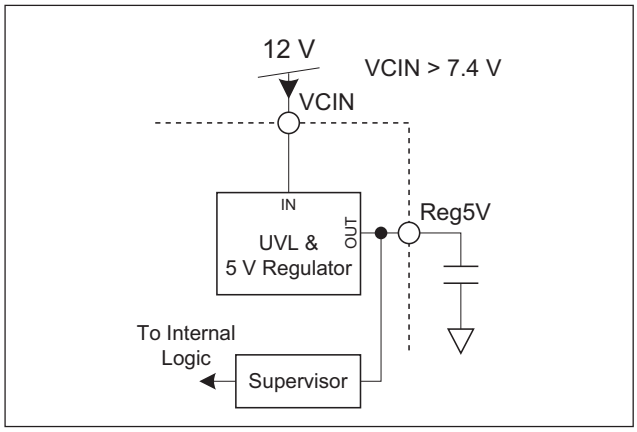

Figure 1.1 Typical 12 V Input Application (Activate Built-in 5 V Regulator)

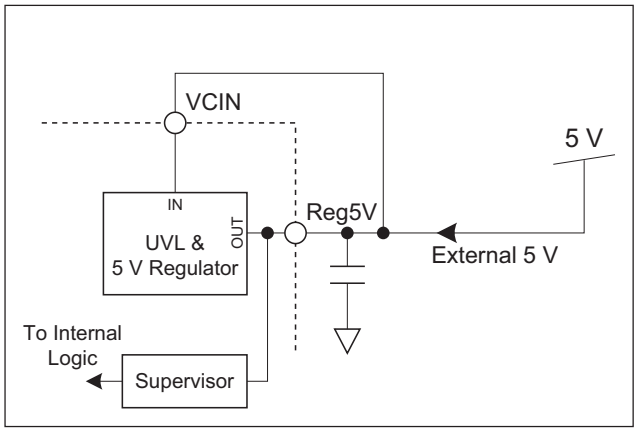

Figure 1.2 External 5 V Application

PWM & LSDBL#

The PWM pin is the signal input pin for the driver chip. When the PWM input is high, the gate of the high-side MOS FET (GH) is high and the gate of the low-side MOS FET (GL) is low.

When the PWM input becomes middle voltage or high impedance, Zero Current Detection (ZCD) function works. Figure 2 shows the operation diagram of PWM input and inductor current (IL).

PWM	GH	GL	IL
L	L	H	*
H	H	L	*
Middle or Open	L	H	> 0
	L	L	≤ 0

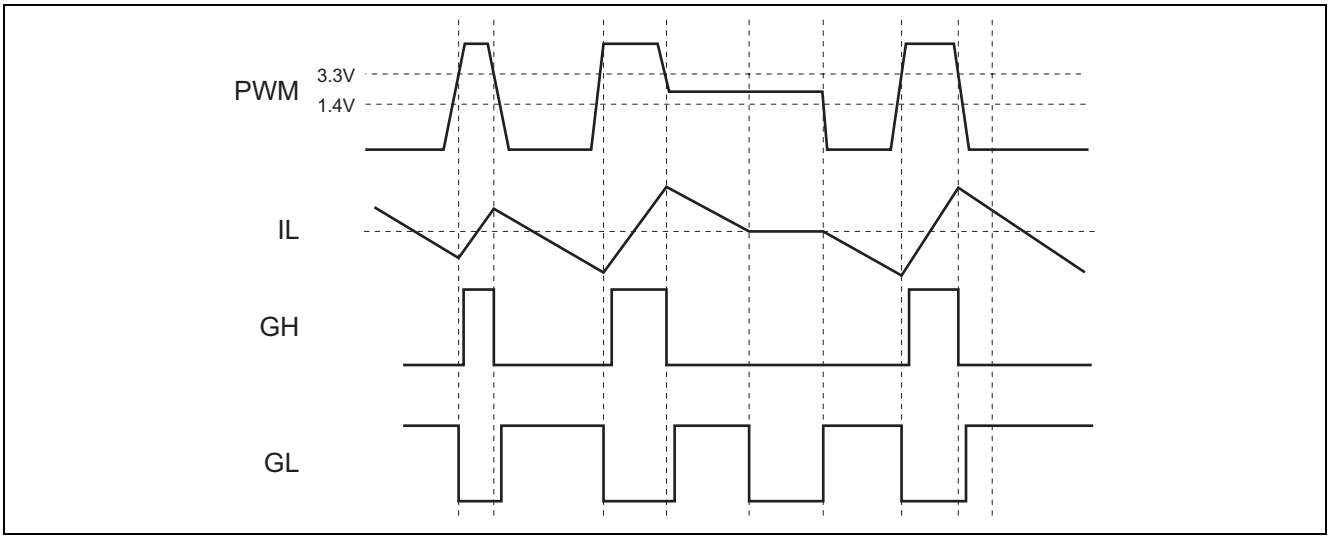

Figure 2 ZCD Operation Diagram

The equivalent circuit for the PWM-pin input is shown in the next figure. PWM SW is in the ON state during normal operation; if DISBL#-pin input is Low or Open State, the PWM SW is turned off.

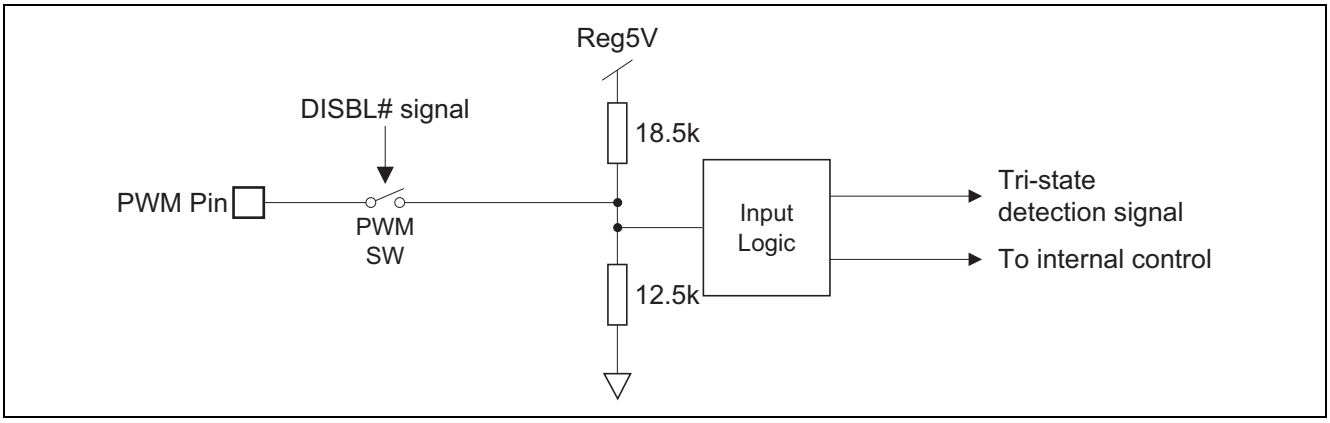

Figure 3 Equivalent Circuit for the PWM-pin Input

The LSDBL# pin is the Low Side Gate Disable pin for "Discontinuous Conduction Mode (DCM)" when LSDBL# is low.

This pin is internally pulled up to Reg5V with 160 kΩ resistor.

When low side disable function is not used, keep this pin open or pulled up to VCIN.

Truth Table for the LSDBL# pin & PWM pin

LSDBL# Input	PWM Input	GL Status
"L"	*	"L"
"Open" or "H"	"L" or "H"	"Continuous Conduction Mode"
	"Open" or "Mid"	"Zero Current Detection" Mode

THWN & THDN

This device has two level thermal detection, one is thermal warning and the other is thermal shutdown function.

This Thermal Warning feature is the indication of the high temperature status.
THWN is an open drain logic output signal and need to connect a pull-up resistor (ex.51 kΩ) to THWN for Systems with the thermal warning implementation.

When the chip temperature of the internal driver IC becomes over 115°C, Thermal warning function operates.

This signal is only indication for the system controller and does not disable DrMOS operation.
When thermal warning function is not used, keep this pin open.

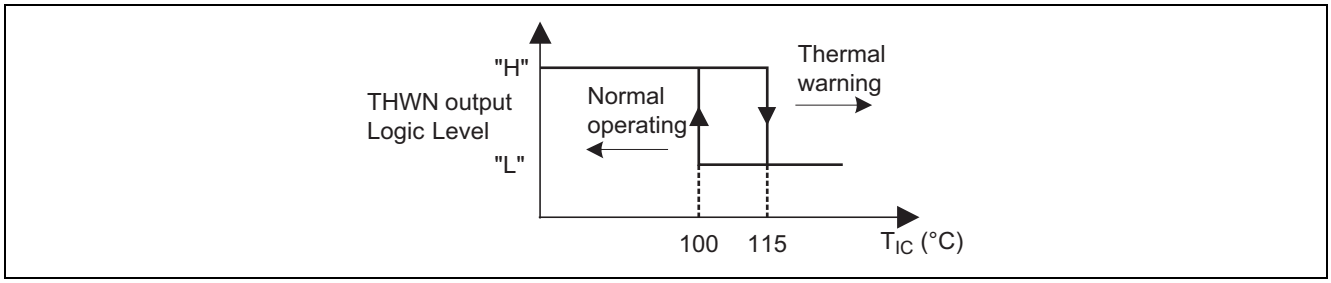

Figure 4 THWN Trigger Temperature

THDN is an internal thermal shutdown signal when driver IC becomes over 150°C.

This function makes High-Side MOS FET and Low-Side MOS FET turn off for the device protection from abnormal high temperature situation and at the same time DISBL# pin is pulled low internally to give notice to the system controller. Once thermal shutdown function operates, driver IC keeps DISBL# pin pulled low until VCIN becomes under UVL level (or under supervisor shutdown level).

Figure 5 shows the example of two types of DISBL# connection with the system controller signal.

Driver IC Temp.	Driver Chip Status
< 150°C	Enable (GL, GH = "Active")
> 150°C	Shutdown (GL, GH = "L")

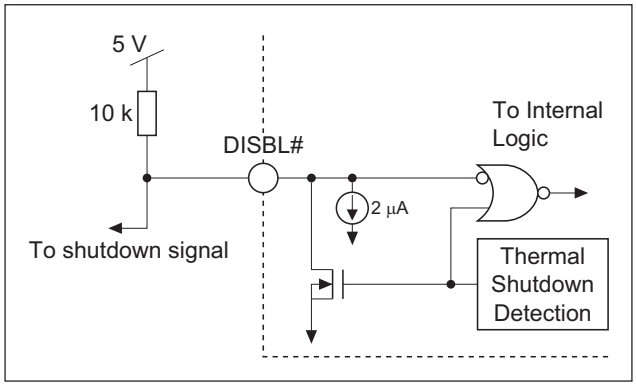

Figure 5.1 THDN Signal to the System Controller

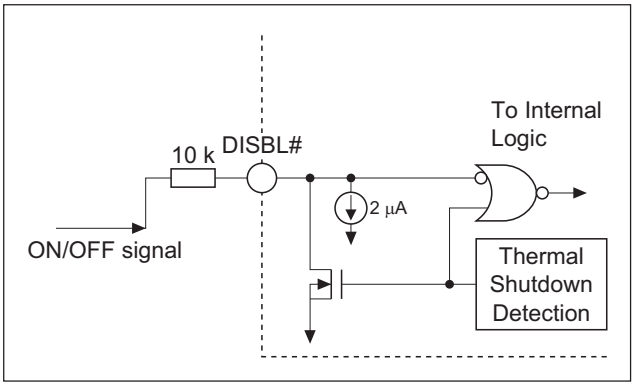

Figure 5.2 ON/OFF Signal from the System Controller

MOS FET

The MOS FETs incorporated in R2J20658BNP are highly suitable for synchronous-rectification buck conversion. For the high-side MOS FET, the drain is connected to the VIN pin and the source is connected to the VSWH pin. For the low-side MOS FET, the drain is connected to the VSWH pin and the source is connected to the PGND pin.

Package Dimensions

JEITA Package Code	RENESAS Code	Previous Code	MASS[Typ.]
P-HVQFN40-p-0606-0.50	PVQN0040KE-A	—	—

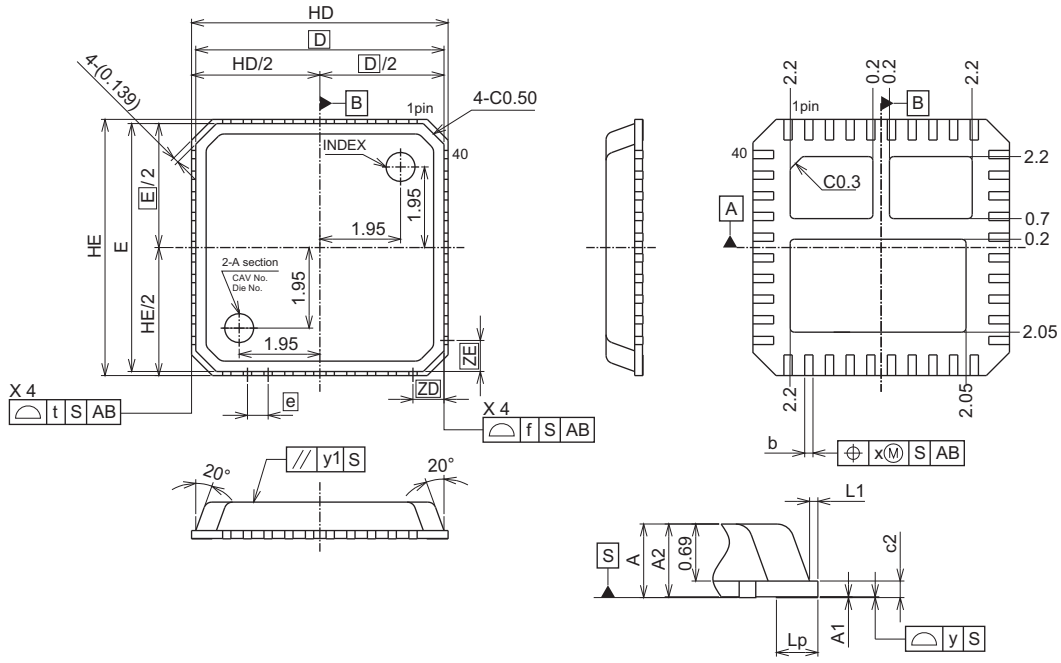

Reference Symbol	Dimension in Millimeters		
	Min	Nom	Max
D	5.95	6.00	6.05
E	5.95	6.00	6.05
A2	0.87	0.89	0.91
f	—	—	0.20
A	0.865	0.91	0.95
A1	0.005	0.02	0.04
b	0.17	0.22	0.27
b1	0.16	0.20	0.24
e	—	0.50	—
Lp	0.40	0.50	0.60
x	—	—	0.05
y	—	—	0.05
y1	—	—	0.20
t	—	—	0.20
HD	6.15	6.20	6.25
HE	6.15	6.20	6.25
ZD	—	0.75	—
ZE	—	0.75	—
L1	0.06	0.10	0.14
c1	0.17	0.20	0.23
c2	0.17	0.22	0.27

Ordering Information

Part Name	Quantity	Shipping Container
R2J20658BNP#G0	2500 pcs	Taping Reel

Notice

1. All information included in this document is current as of the date this document is issued. Such information, however, is subject to change without any prior notice. Before purchasing or using any Renesas Electronics products listed herein, please confirm the latest product information with a Renesas Electronics sales office. Also, please pay regular and careful attention to additional and different information to be disclosed by Renesas Electronics such as that disclosed through our website.
2. Renesas Electronics does not assume any liability for infringement of patents, copyrights, or other intellectual property rights of third parties by or arising from the use of Renesas Electronics products or technical information described in this document. No license, express, implied or otherwise, is granted hereby under any patents, copyrights or other intellectual property rights of Renesas Electronics or others.
3. You should not alter, modify, copy, or otherwise misappropriate any Renesas Electronics product, whether in whole or in part.
4. Descriptions of circuits, software and other related information in this document are provided only to illustrate the operation of semiconductor products and application examples. You are fully responsible for the incorporation of these circuits, software, and information in the design of your equipment. Renesas Electronics assumes no responsibility for any losses incurred by you or third parties arising from the use of these circuits, software, or information.
5. When exporting the products or technology described in this document, you should comply with the applicable export control laws and regulations and follow the procedures required by such laws and regulations. You should not use Renesas Electronics products or the technology described in this document for any purpose relating to military applications or use by the military, including but not limited to the development of weapons of mass destruction. Renesas Electronics products and technology may not be used for or incorporated into any products or systems whose manufacture, use, or sale is prohibited under any applicable domestic or foreign laws or regulations.
6. Renesas Electronics has used reasonable care in preparing the information included in this document, but Renesas Electronics does not warrant that such information is error free. Renesas Electronics assumes no liability whatsoever for any damages incurred by you resulting from errors in or omissions from the information included herein.
7. Renesas Electronics products are classified according to the following three quality grades: "Standard", "High Quality", and "Specific". The recommended applications for each Renesas Electronics product depends on the product's quality grade, as indicated below. You must check the quality grade of each Renesas Electronics product before using it in a particular application. You may not use any Renesas Electronics product for any application categorized as "Specific" without the prior written consent of Renesas Electronics. Further, you may not use any Renesas Electronics product for any application for which it is not intended without the prior written consent of Renesas Electronics. Renesas Electronics shall not be in any way liable for any damages or losses incurred by you or third parties arising from the use of any Renesas Electronics product for an application categorized as "Specific" or for which the product is not intended where you have failed to obtain the prior written consent of Renesas Electronics. The quality grade of each Renesas Electronics product is "Standard" unless otherwise expressly specified in a Renesas Electronics data sheets or data books, etc.
   "Standard": Computers; office equipment; communications equipment; test and measurement equipment; audio and visual equipment; home electronic appliances; machine tools; personal electronic equipment; and industrial robots.
   "High Quality": Transportation equipment (automobiles, trains, ships, etc.); traffic control systems; anti-disaster systems; anti-crime systems; safety equipment; and medical equipment not specifically designed for life support.
   "Specific": Aircraft; aerospace equipment; submersible repeaters; nuclear reactor control systems; medical equipment or systems for life support (e.g. artificial life support devices or systems), surgical implantations, or healthcare intervention (e.g. excision, etc.), and any other applications or purposes that pose a direct threat to human life.
8. You should use the Renesas Electronics products described in this document within the range specified by Renesas Electronics, especially with respect to the maximum rating, operating supply voltage range, movement power voltage range, heat radiation characteristics, installation and other product characteristics. Renesas Electronics shall have no liability for malfunctions or damages arising out of the use of Renesas Electronics products beyond such specified ranges.
9. Although Renesas Electronics endeavors to improve the quality and reliability of its products, semiconductor products have specific characteristics such as the occurrence of failure at a certain rate and malfunctions under certain use conditions. Further, Renesas Electronics products are not subject to radiation resistance design. Please be sure to implement safety measures to guard them against the possibility of physical injury, and injury or damage caused by fire in the event of the failure of a Renesas Electronics product, such as safety design for hardware and software including but not limited to redundancy, fire control and malfunction prevention, appropriate treatment for aging degradation or any other appropriate measures. Because the evaluation of microcomputer software alone is very difficult, please evaluate the safety of the final products or system manufactured by you.
10. Please contact a Renesas Electronics sales office for details as to environmental matters such as the environmental compatibility of each Renesas Electronics product. Please use Renesas Electronics products in compliance with all applicable laws and regulations that regulate the inclusion or use of controlled substances, including without limitation, the EU RoHS Directive. Renesas Electronics assumes no liability for damages or losses occurring as a result of your noncompliance with applicable laws and regulations.
11. This document may not be reproduced or duplicated, in any form, in whole or in part, without prior written consent of Renesas Electronics.
12. Please contact a Renesas Electronics sales office if you have any questions regarding the information contained in this document or Renesas Electronics products, or if you have any other inquiries.

(Note 1) "Renesas Electronics" as used in this document means Renesas Electronics Corporation and also includes its majority-owned subsidiaries.

(Note 2) "Renesas Electronics product(s)" means any product developed or manufactured by or for Renesas Electronics.

SALES OFFICES Renesas Electronics Corporation http://www.renesas.com

Refer to "http://www.renesas.com/" for the latest and detailed information.

Renesas Electronics America Inc.
2880 Scott Boulevard Santa Clara, CA 95050-2554, U.S.A.
Tel: +1-408-588-6000, Fax: +1-408-588-6130

Renesas Electronics Canada Limited
1101 Nicholson Road, Newmarket, Ontario L3Y 9C3, Canada
Tel: +1-905-898-5441, Fax: +1-905-898-3220

Renesas Electronics Europe Limited
Dukes Meadow, Millboard Road, Bourne End, Buckinghamshire, SL8 5FH, U.K
Tel: +44-1628-585-100, Fax: +44-1628-585-900

Renesas Electronics Europe GmbH
Arcadiastrasse 10, 40472 Düsseldorf, Germany
Tel: +49-211-65030, Fax: +49-211-6503-1327

Renesas Electronics (China) Co., Ltd.
7th Floor, Quantum Plaza, No.27 ZhiChunLu Haidian District, Beijing 100083, P.R.China
Tel: +86-10-8235-1155, Fax: +86-10-8235-7679

Renesas Electronics (Shanghai) Co., Ltd.
Unit 204, 205, AZIA Center, No.1233 Lujiazui Ring Rd., Pudong District, Shanghai 200120, China
Tel: +86-21-5877-1818, Fax: +86-21-6887-7858 / -7898

Renesas Electronics Hong Kong Limited
Unit 1601-1613, 16/F., Tower 2, Grand Century Place, 193 Prince Edward Road West, Mongkok, Kowloon, Hong Kong
Tel: +852-2886-9318, Fax: +852 2886-9022/9044

Renesas Electronics Taiwan Co., Ltd.
13F, No. 363, Fu Shing North Road, Taipei, Taiwan
Tel: +886-2-8175-9600, Fax: +886 2-8175-9670

Renesas Electronics Singapore Pte. Ltd.
1 harbourFront Avenue, #06-10, keppel Bay Tower, Singapore 098632
Tel: +65-6213-0200, Fax: +65-6278-8001

Renesas Electronics Malaysia Sdn.Bhd.
Unit 906, Block B, Menara Amcorp, Amcorp Trade Centre, No. 18, Jln Persiaran Barat, 46050 Petaling Jaya, Selangor Darul Ehsan, Malaysia
Tel: +60-3-7955-9390, Fax: +60-3-7955-9510

Renesas Electronics Korea Co., Ltd.
11F., Samik Lavied' or Bldg., 720-2 Yeoksam-Dong, Kangnam-Ku, Seoul 135-080, Korea
Tel: +82-2-558-3737, Fax: +82-2-558-5141

© 2011 Renesas Electronics Corporation. All rights reserved.

Colophon 1.1