# R2J20655BNP

## Integrated Driver - MOS FET (DrMOS)

R07DS0548EJ0101
(Previous No.: R07DS0540EJ0100)
Rev.1.01
Sep 30, 2011

## Description

The R2J20655BNP multi-chip module incorporates a high-side MOS FET, low-side MOS FET, and MOS-FET driver in a single QFN package. The on and off timing of the power MOS FET is optimized by the built-in driver, making this device suitable for large-current buck converters. The chip also incorporates a high-side bootstrap switch, eliminating the need for an external SBD for this purpose.

## Features

- Based on Intel 6 × 6 DrMOS Specification.
- Built-in power MOS FET suitable for Desktop, Server application.
- Low-side MOS FET with built-in SBD for lower loss and reduced ringing.
- Built-in driver circuit which matches the power MOS FET
- Built-in tri-state input function which can support a number of PWM controllers
- High-frequency operation (above 1 MHz) possible
- VIN operating-voltage range: 27 Vmax
- Large average output current (Max.35 A)
- Achieve low power dissipation
- Controllable driver: Remote on/off
- Support Mid-Voltage PWM signal to enter zero current detection
- Double thermal protection: Thermal Warning & Thermal Shutdown
- Built-in bootstrapping Switch
- Small package: QFN40 (6 mm × 6 mm × 0.95 mm)
- Pb-free/Halogen-Free

## Outline

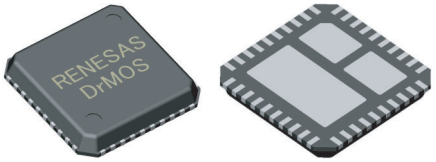


Integrated Driver-MOS FET (DrMOS)
QFN40 package 6 mm × 6 mm

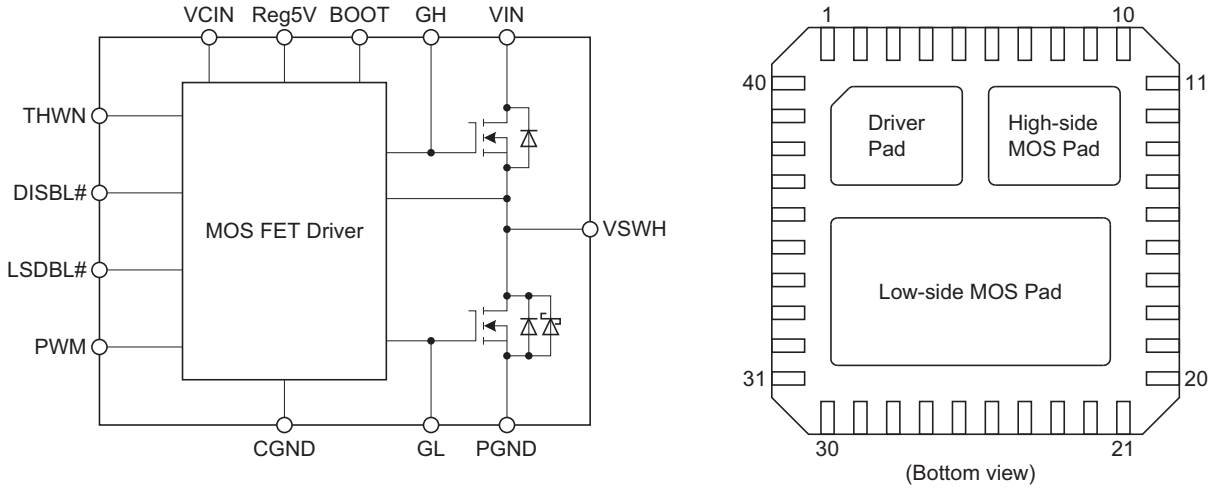

## Block Diagram

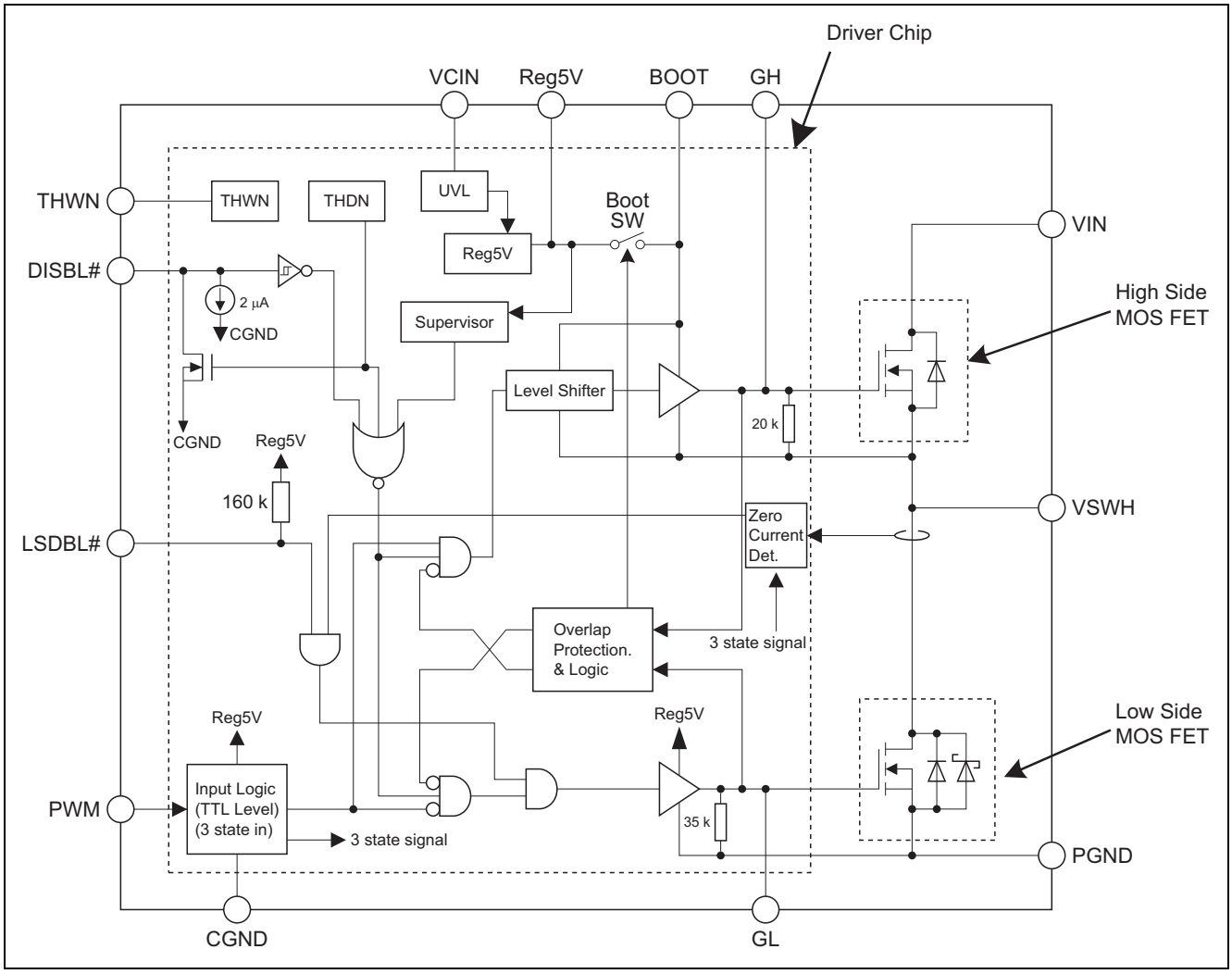


Notes: 1. Truth table for the DISBL# pin

| DISBL# Input | Driver Chip Status |
|---|---|
| "L" | Shutdown (GL, GH = "L") |
| "Open" | Shutdown (GL, GH = "L") |
| "H" | Enable (GL, GH = "Active") |

2. Truth table for the LSDBL# pin & PWM pin

| LSDBL# Input | PWM Input | GL Status |
|---|---|---|
| "L" | * | "L" |
| "Open" or "H" | "L" or "H" | "Continuous Conduction Mode" |
| | "Open" or "Mid" | "Zero Current Detection" Mode |

3. Output signal from the UVL block

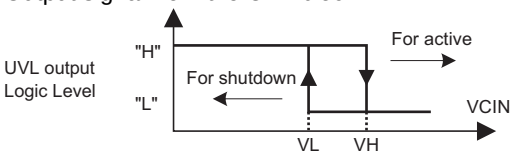


4. Output signal from the THWN block

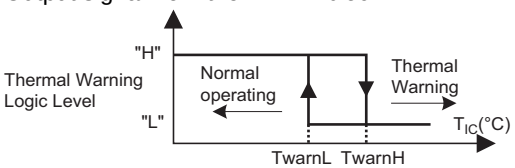


5. Truth table for the THDN block

| Driver IC Temp. | Driver Chip Status |
|---|---|
| < 150°C | Enable (GL, GH = "Active") |
| > 150°C | Shutdown (GL, GH = "L") (latch-off) |

## Pin Arrangement

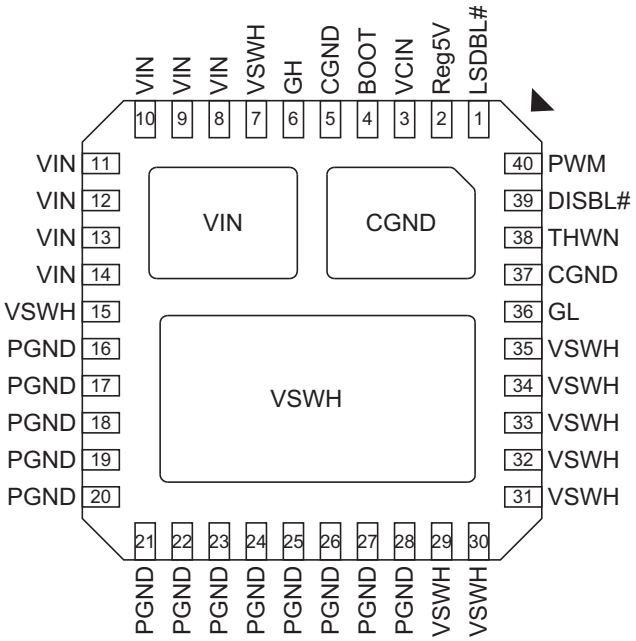


(Top view)

Note: All die-pads (three pads in total) should be soldered to PCB.

## Pin Description

| Pin Name | Pin No. | Description | Remarks |
|---|---|---|---|
| LSDBL# | 1 | Low-side gate disable | When asserted "L" signal, Low-side gate disable |
| Reg5V | 2 | +5 V logic power supply output | |
| VCIN | 3 | Control input voltage | Driver Vcc input |
| BOOT | 4 | Bootstrap voltage pin | To be supplied +5 V through internal switch |
| CGND | 5, 37, Pad | Control signal ground | Should be connected to PGND externally |
| GH | 6 | High-side gate signal | Pin for monitor |
| VIN | 8 to 14, Pad | Input voltage | |
| VSWH | 7, 15, 29 to 35, Pad | Phase output/Switch output | |
| PGND | 16 to 28 | Power ground | |
| GL | 36 | Low-side gate signal | Pin for monitor |
| THWN | 38 | Thermal warning | Thermal warning when over 115°C |
| DISBL# | 39 | Signal disable | Disabled when DISBL# is "L".<br>This Pin is pulled low when internal IC over the thermal shutdown level, 150°C. |
| PWM | 40 | PWM drive logic input | 5 V logic input |

## Absolute Maximum Ratings

(Ta = 25°C)

| Item | Symbol | Rating | Units | Note |
|---|---|---|---|---|
| Power dissipation | Pt(25) | 25 | W | 1 |
| | Pt(110) | 8 | | |
| Average output current | Iout | 35 | A | |
| Input voltage | VIN(DC) | –0.3 to +27 | V | 2 |
| | VIN(AC) | 30 | | 2, 4, 6 |
| Switch node voltage | VSWH(DC) | 27 | V | 2 |
| | VSWH(AC) | 30 | | 2, 4, 6 |
| BOOT voltage | VBOOT(DC) | 32 | V | 2 |
| | VBOOT(AC) | 36 | | 2, 4, 6 |
| Supply voltage | VCIN | –0.3 to +27 | V | 2 |
| PWM voltage | Vpwm | –0.3 to +5.5 @UVL OFF<br>–0.3 to +0.3 @UVL ON<br>–0.3 to Reg5V + 0.3 | V | 2, 4<br>2, 5<br>2, 7, 8 |
| Other I/O voltage | Vdisbl, Vlsdbl | –0.3 to VCIN + 0.3 | V | 2 |
| Reg5V voltage | Vreg5V | –0.3 to +6 | V | 2, 7 |
| Reg5V current | Ireg5V | –20 to +0.1 | mA | 3 |
| THWN/THDN current | Ithwn, Idisbl | 0 to 1.0 | mA | 3 |
| Operating junction temperature | Tj-opr | –40 to +150 | °C | |
| Storage temperature | Tstg | –55 to +150 | °C | |

Notes: 1. Pt(25) represents a PCB temperature of 25°C, and Pt(110) represents 110°C.
2. Rated voltages are relative to voltages on the CGND and PGND pins.
3. For rated current, (+) indicates inflow to the chip and (–) indicates outflow.
4. This rating is when UVL (Under Voltage Lock out) is ineffective (normal operation mode).
5. This rating is when UVL (Under Voltage Lock out) is effective (lock out mode).
6. The specification values indicated "AC" are limited within 10 ns.
7. This rating is when the external power-source is applied to Reg5V pin.
8. Reg5V + 0.3 V < 6 V

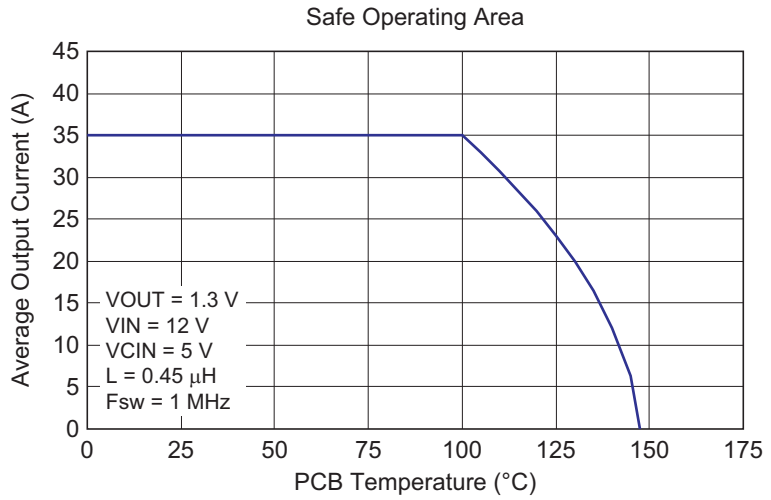

## Recommended Operating Condition

| Item | Symbol | Rating | Units | Note |
|---|---|---|---|---|
| Input voltage | VIN | 4.5 to 22 | V | When the usage of VCIN = 4.5 V to 5.5 V, VCIN should be connected to Reg5V (Refer to "Pin Connection") |
| Supply voltage & Drive voltage | VCIN | 4.5 to 5.5 or 8 to 22 | V | |

## Electrical Characteristics

(Ta = 25°C, VCIN = 12 V, VSWH = 0 V, unless otherwise specified)

| Item | | Symbol | Min | Typ | Max | Units | Test Conditions |
|---|---|---|---|---|---|---|---|
| Supply | VCIN start threshold | $V_H$ | 7.0 | 7.4 | 7.8 | V | |
| | VCIN shutdown threshold | $V_L$ | 6.6 | 7.0 | 7.4 | V | |
| | UVLO hysteresis | dUVL | — | 0.4 | — | V | $V_H – V_L$ |
| | VCIN operating current | $I_{CIN}$ | — | 49 | — | mA | $f_{PWM}$ = 1 MHz, Ton_pwm = 120 ns |
| | VCIN disable current | $I_{CIN-DISBL}$ | — | — | 1.2 | mA | DISBL# = 0 V, PWM = LSDBL# = Open |
| PWM input | PWM input high level | $V_{H-PWM}$ | 4.1 | — | — | V | 5.0 V PWM interface |
| | PWM input low level | $V_{L-PWM}$ | — | — | 0.8 | V | |
| | PWM input resistance | $R_{IN-PWM}$ | 3.5 | 7.5 | 15 | kΩ | $\frac{4V – 1V}{I_{PWM}(V_{PWM=4V}) – I_{PWM}(V_{PWM=1V})}$ |
| | PWM input tri-state range | $V_{IN-tri}$ | 1.4 | — | 3.3 | V | 5.0 V PWM interface |
| DISBL# input | Enable level | $V_{ENBL}$ | 2.0 | — | — | V | |
| | Disable level | $V_{DISBL}$ | — | — | 0.8 | V | |
| | Input current | $I_{DISBL}$ | — | 2.0 | 5.0 | μA | DISBL# = 1 V |
| | THDN on resistance | $R_{THDN}$ *1 | 0.2 | 0.5 | 1.0 | kΩ | DISBL# = 0.2 V |
| LSDBL# input | Low-side activation level | $V_{LSDBLH}$ | 2.0 | — | — | V | |
| | Low-side disable level | $V_{LSDBLL}$ | — | — | 0.8 | V | |
| | Input current | $I_{LSDBL}$ | –52 | –26 | –12 | μA | LSDBL# = 1 V |
| Thermal warning | Warning temperature | $T_{THWN}$ *1 | 100 | 115 | 130 | °C | Driver IC temperature |
| | Temperature hysteresis | $T_{HYS}$ *1 | — | 15 | — | °C | |
| | THWN on resistance | $R_{THWN}$ *1 | 0.2 | 0.5 | 1.0 | kΩ | THWN = 0.2 V |
| | THWN leakage current | $I_{LEAK}$ | — | — | 1.0 | μA | THWN = 5 V |
| Thermal shutdown | Shutdown temperature | Tstdn *1 | 130 | 150 | — | °C | Driver IC temperature |
| 5 V regulator | Output voltage | Vreg | 4.95 | 5.2 | 5.45 | V | |
| | Line regulation | Vreg-line | –10 | 0 | 10 | mV | VCIN = 12 V to 16 V |
| | Load regulation | Vreg-load | –10 | 0 | 10 | mV | Ireg = 0 to 10 mA |

Note: 1. Reference values for design. Not 100% tested in production.

# Typical Application

## (1) Desktop/Server Application

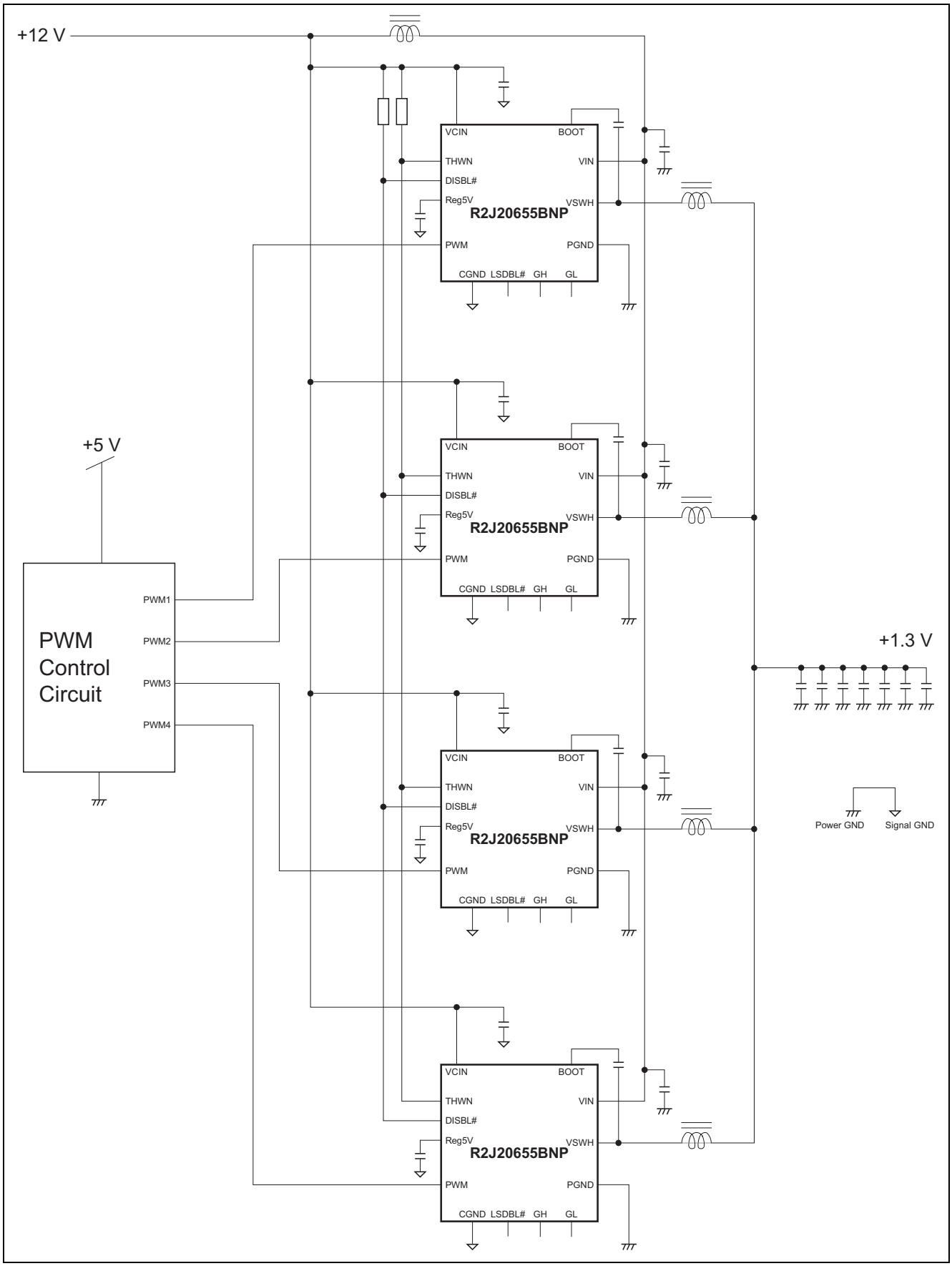

## Typical Application (cont.)

### (2) Notebook Application

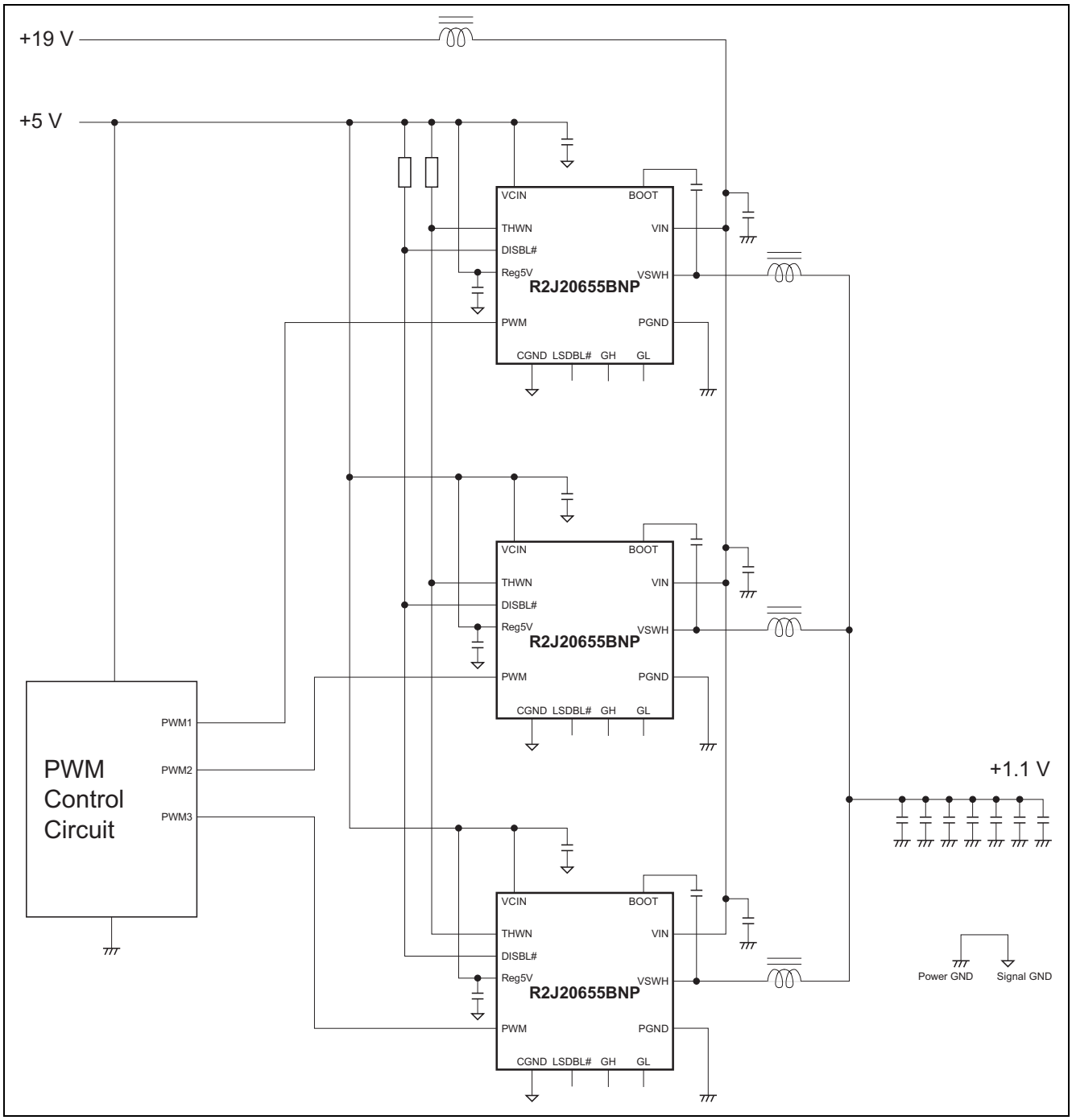

## Pin Connection

### (1) Single 12 V Application

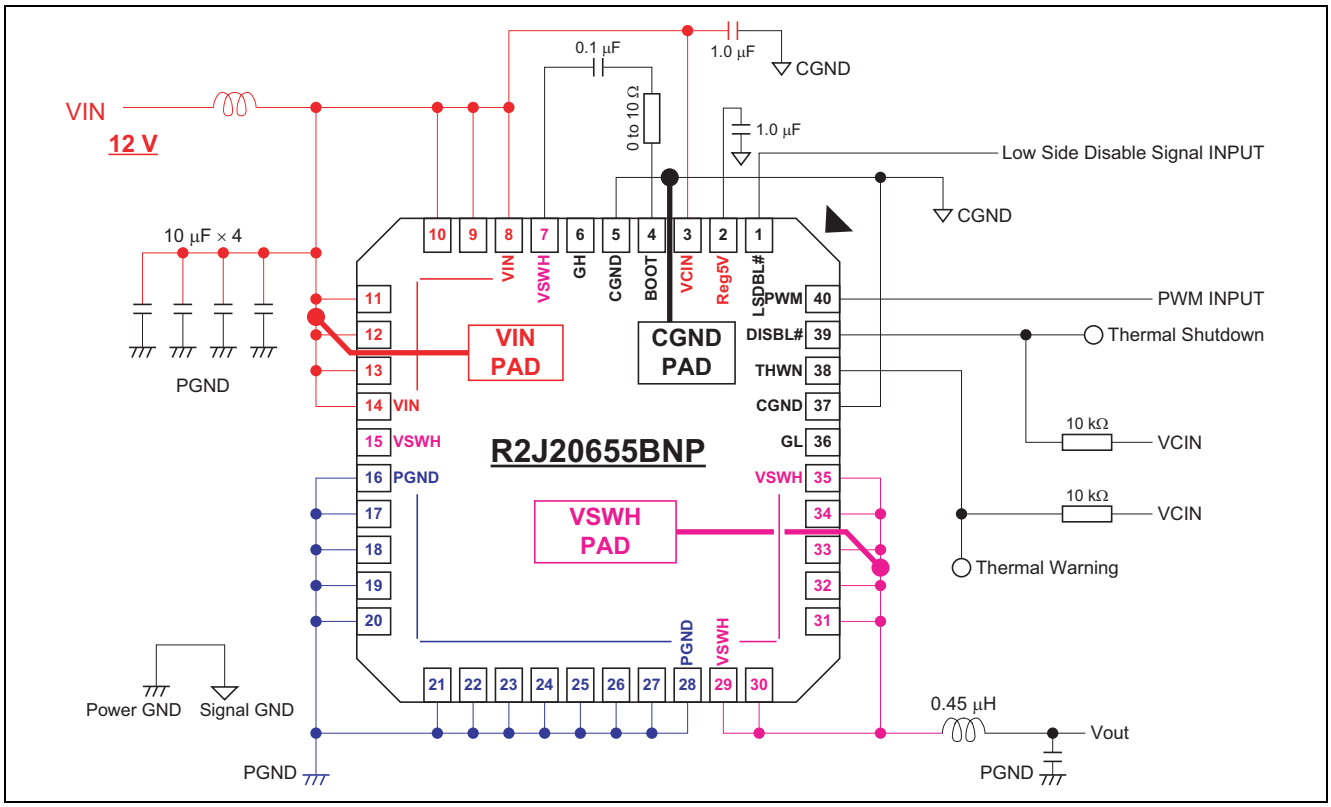


### (2) VCIN 5 V Application

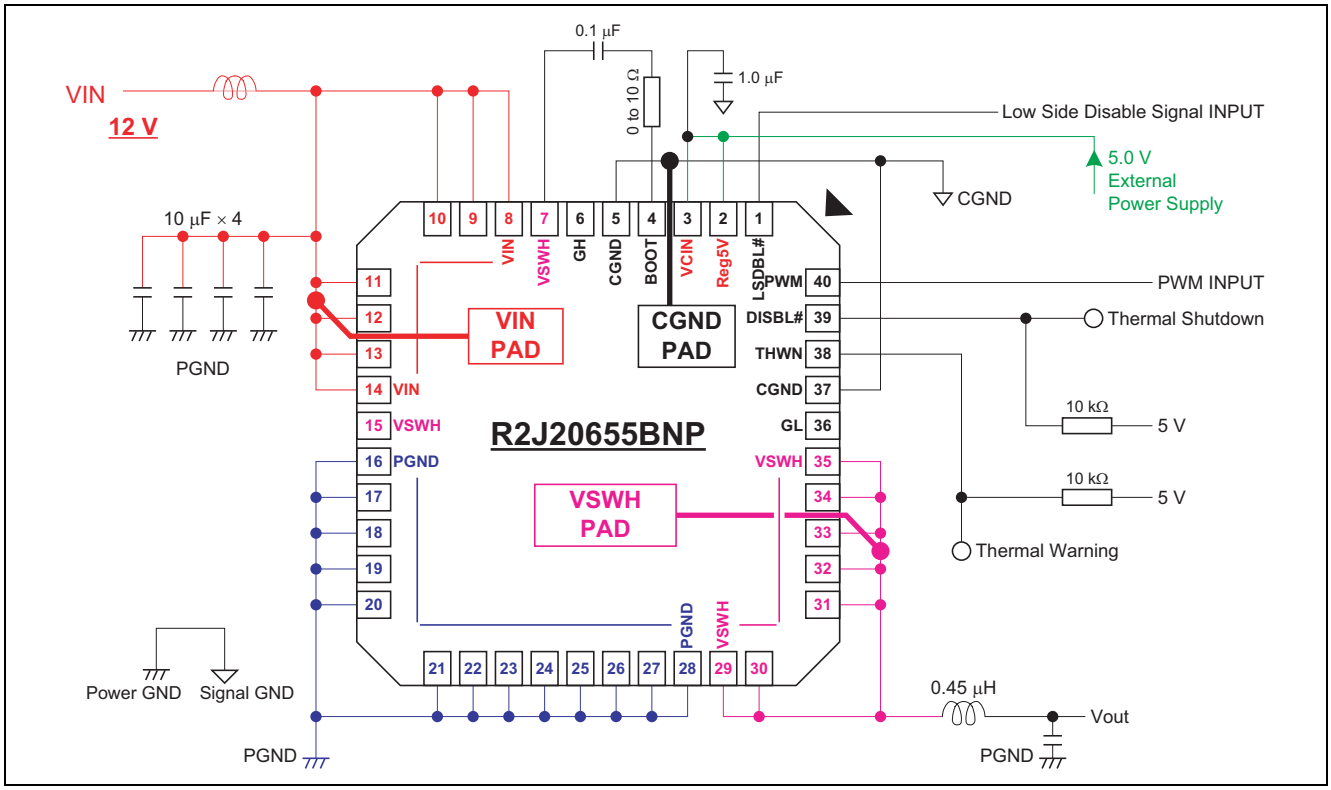

## Test Circuit

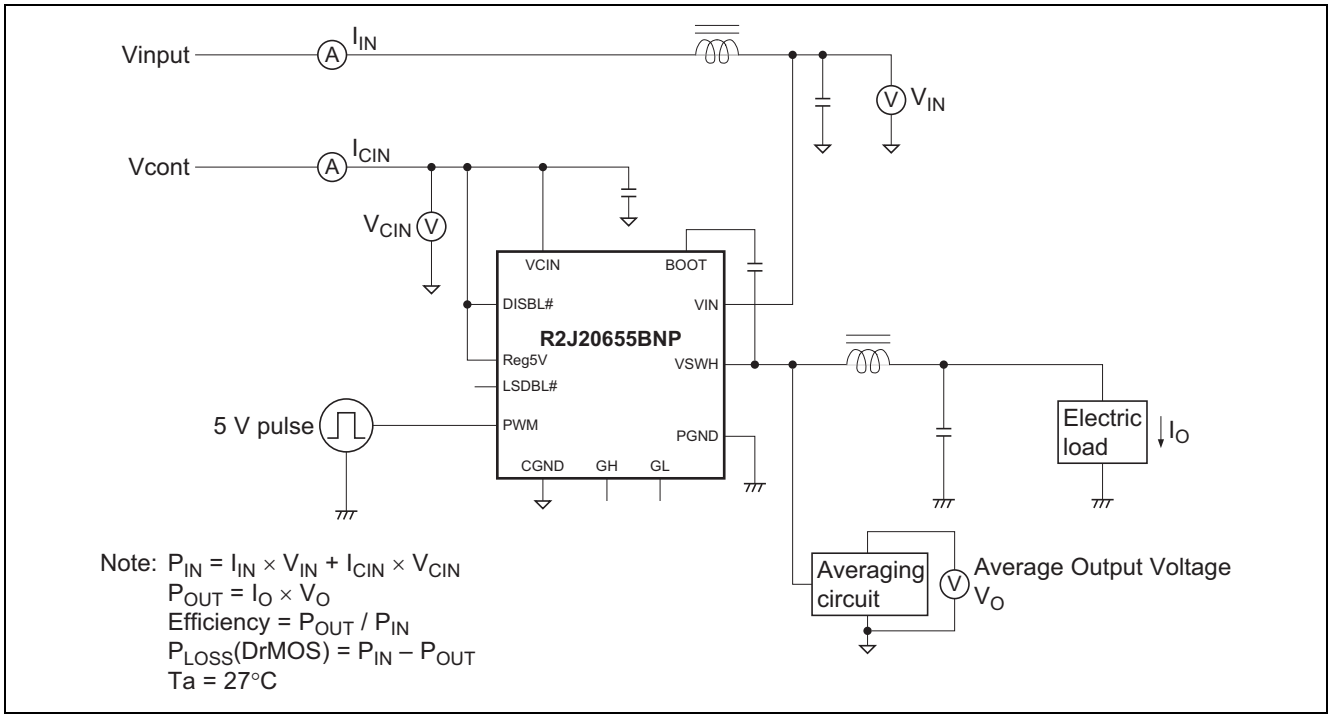

## Typical Data

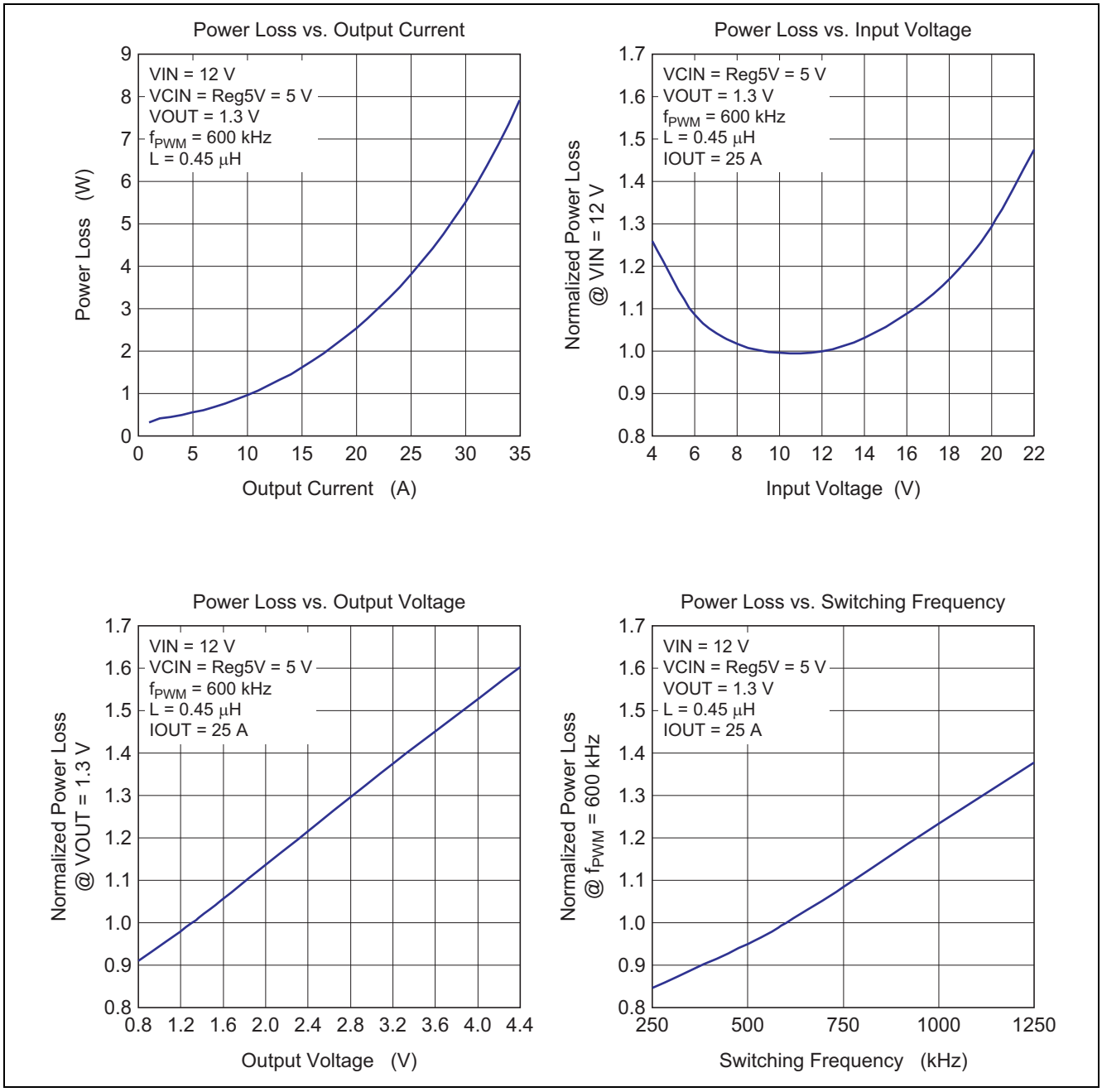

## **Typical Data** (cont.)

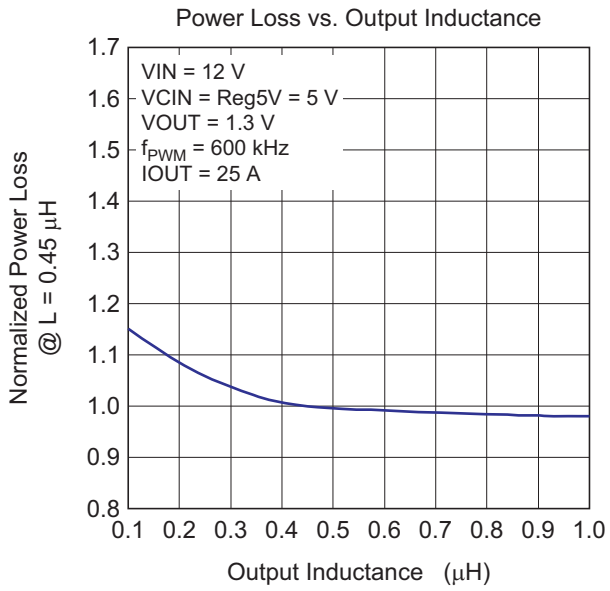


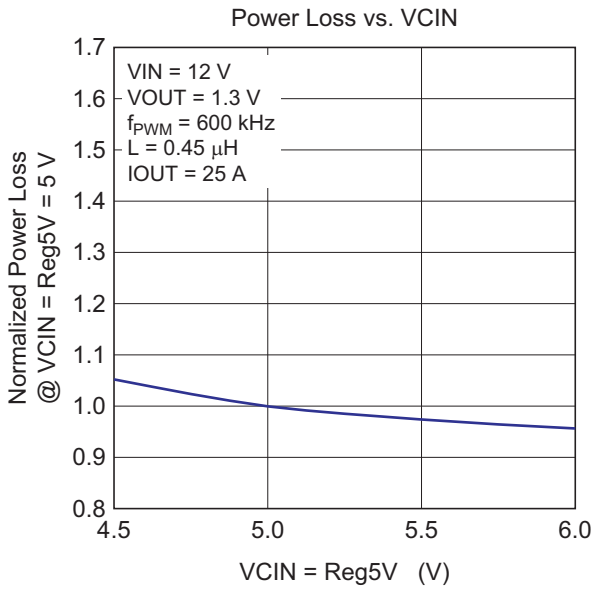


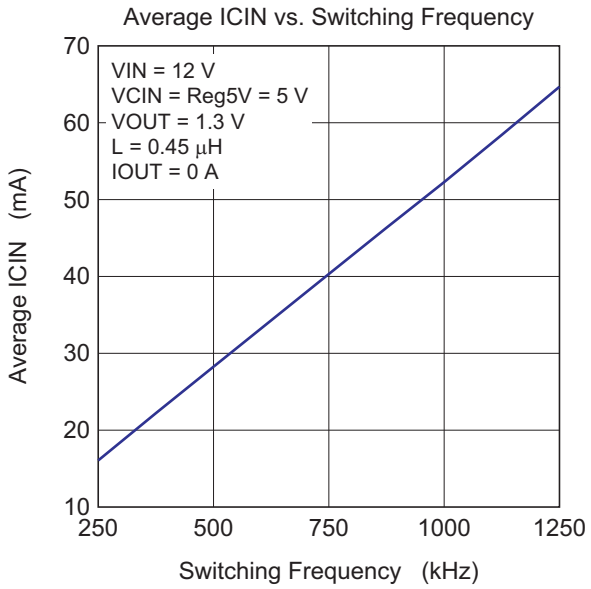

## Description of Operation

The DrMOS multi-chip module incorporates a high-side MOS FET, low-side MOS FET, and MOS-FET driver in a single QFN package. Since the parasitic inductance between each chip is extremely small, the module is highly suitable for use in buck converters to be operated at high frequencies. The control timing between the high-side MOS FET, low-side MOS FET, and driver is optimized so that high efficiency can be obtained at low output-voltage.

### VCIN & DISBL#

The VCIN pin is connected to the UVL (under-voltage lockout) module, so that the built-in 5 V regulator is disabled as long as VCIN is 7.4 V or less. On cancellation of UVL, the built-in 5 V regulator remains enabled until the UVL input is driven to 7.0 V or less.

The built-in 5 V regulator is a series regulator with temperature compensation. A ceramic capacitor with a value of 0.1 μF or more must be connected between the CGND plane and the Reg5V pin.

The output of 5 V regulator is monitored by the internal Supervisor circuits. When the Supervisor detects this output is more than 4.3 V (typ.), the driver state becomes active (figure 1.1). Supervisor circuit has hysteresis and its shutdown level of Supervisor is 3.8 V (typ.).

Figure 1.2 shows the application when the external 5 V regulator is used. When the Reg5V pin is applied into external 5 V, the Supervisor can activate the driver. In this application usage, VCIN should be connected to Reg5V.

The signal on pin DISBL# also enables or disables the circuit. When UVL disables the circuit , the built-in 5 V regulator does not operate, but when the signal on DISBL# disables the circuit, only output-pulse generation is terminated, and the 5 V regulator is not disabled.

Voltages from –0.3 V to VCIN+0.3 V can be applied to the DISBL# pin, so on/off control by a logic IC or the use of a resistor, etc., to pull the DISBL# line up to VCIN are both possible.

| VCIN | DISBL# | REG5V | Driver State |
|---|---|---|---|
| L | * | 0 | Disable (GL, GH = L) |
| H | L | Active | Disable (GL, GH = L) |
| H | H | Active | Active |
| H | Open | Active | Disable (GL, GH = L) |

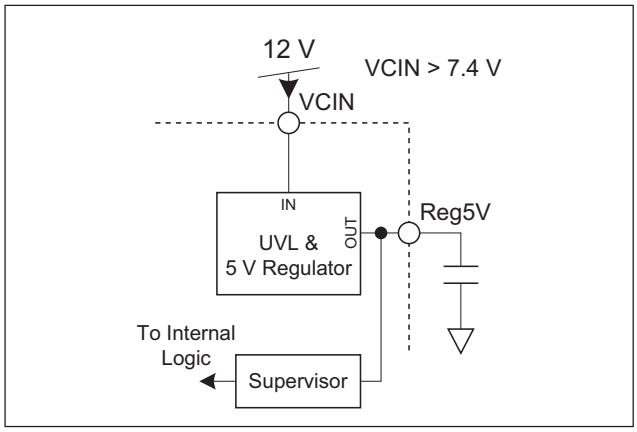


**Figure 1.1 Typical 12 V Input Application (Activate Built-in 5 V Regulator)**

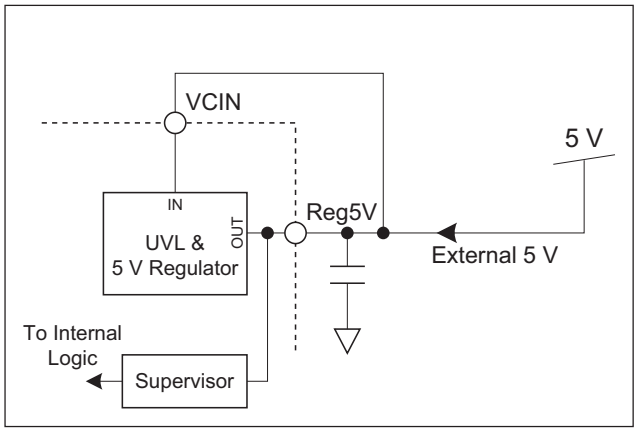


**Figure 1.2 External 5 V Application**

### PWM & LSDBL#

The PWM pin is the signal input pin for the driver chip. When the PWM input is high, the gate of the high-side MOS FET (GH) is high and the gate of the low-side MOS FET (GL) is low.

When the PWM input becomes middle voltage or high impedance, Zero Current Detection (ZCD) function works. Figure 2 shows the operation diagram of PWM input and inductor current (IL).

| PWM | GH | GL | IL |
|---|---|---|---|
| L | L | H | * |
| H | H | L | * |
| Middle or Open | L | H | > 0 |
| | L | L | ≤ 0 |

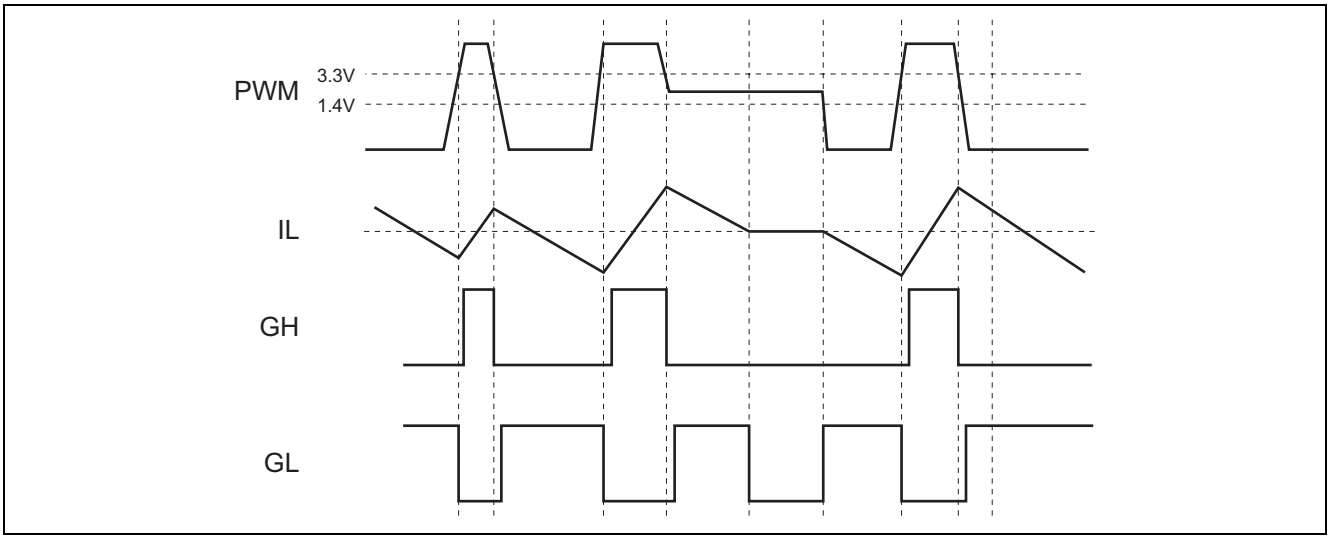


**Figure 2 ZCD Operation Diagram**

The equivalent circuit for the PWM-pin input is shown in the next figure. PWM SW is in the ON state during normal operation; if DISBL#-pin input is Low or Open State, the PWM SW is turned off.

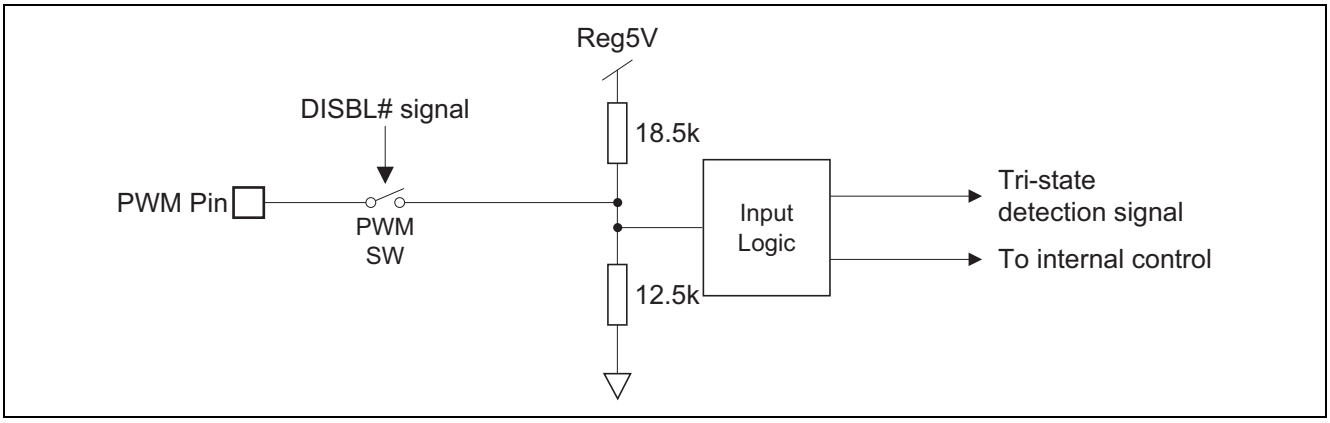


**Figure 3 Equivalent Circuit for the PWM-pin Input**

The LSDBL# pin is the Low Side Gate Disable pin for "Discontinuous Conduction Mode (DCM)" when LSDBL# is low.

This pin is internally pulled up to Reg5V with 160 kΩ resistor.

When low side disable function is not used, keep this pin open or pulled up to VCIN.

### Truth Table for the LSDBL# pin & PWM pin

| LSDBL# Input | PWM Input | GL Status |
|---|---|---|
| "L" | * | "L" |
| "Open" or "H" | "L" or "H" | "Continuous Conduction Mode" |
| | "Open" or "Mid" | "Zero Current Detection" Mode |

### THWN & THDN

This device has two level thermal detection, one is thermal warning and the other is thermal shutdown function.

This Thermal Warning feature is the indication of the high temperature status.
THWN is an open drain logic output signal and need to connect a pull-up resistor (ex.51 kΩ) to THWN for Systems with the thermal warning implementation.

When the chip temperature of the internal driver IC becomes over 115°C, Thermal warning function operates.

This signal is only indication for the system controller and does not disable DrMOS operation.
When thermal warning function is not used, keep this pin open.

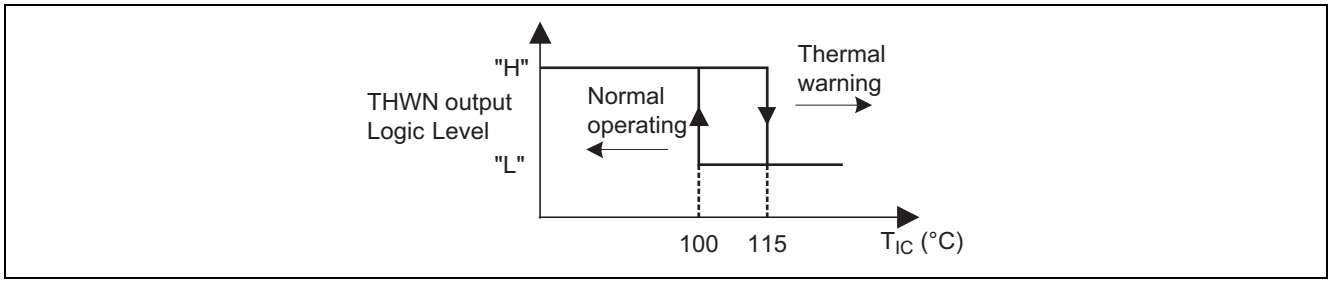


**Figure 4 THWN Trigger Temperature**

THDN is an internal thermal shutdown signal when driver IC becomes over 150°C.

This function makes High Side MOS FET and Low Side MOS FET turn off for the device protection from abnormal high temperature situation and at the same time DISBL# pin is pulled low internally to give notice to the system controller. Once thermal shutdown function operates, driver IC keeps DISBL# pin pulled low until VCIN becomes under UVL level (or under supervisor shutdown level).

Figure 5 shows the example of two types of DISBL# connection with the system controller signal.

| Driver IC Temp. | Driver Chip Status |
|---|---|
| < 150°C | Enable (GL, GH = "Active") |
| > 150°C | Shutdown (GL, GH = "L") |

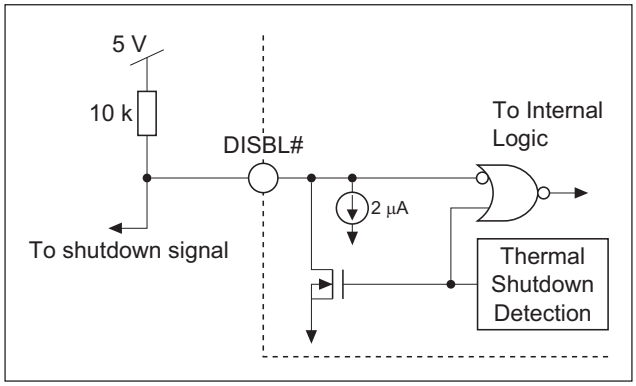


**Figure 5.1 THDN Signal to the System Controller**

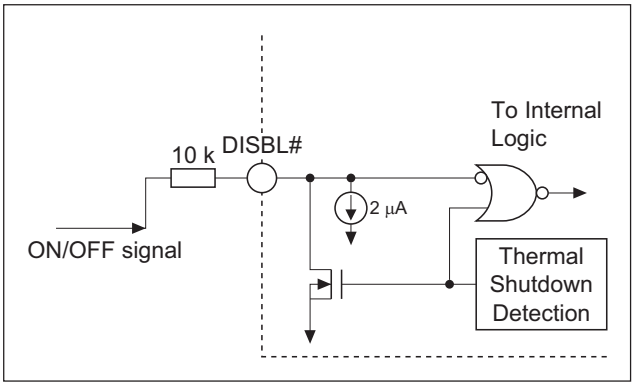


**Figure 5.2 ON/OFF Signal from the System Controller**

### MOS FET

The MOS FETs incorporated in R2J20655BNP are highly suitable for synchronous-rectification buck conversion. For the high-side MOS FET, the drain is connected to the VIN pin and the source is connected to the VSWH pin. For the low-side MOS FET, the drain is connected to the VSWH pin and the source is connected to the PGND pin.

## Package Dimensions

| JEITA Package Code | RENESAS Code | Previous Code | MASS[Typ.] |
|---|---|---|---|
| P-HVQFN40-p-0606-0.50 | PVQN0040KE-A | — | — |

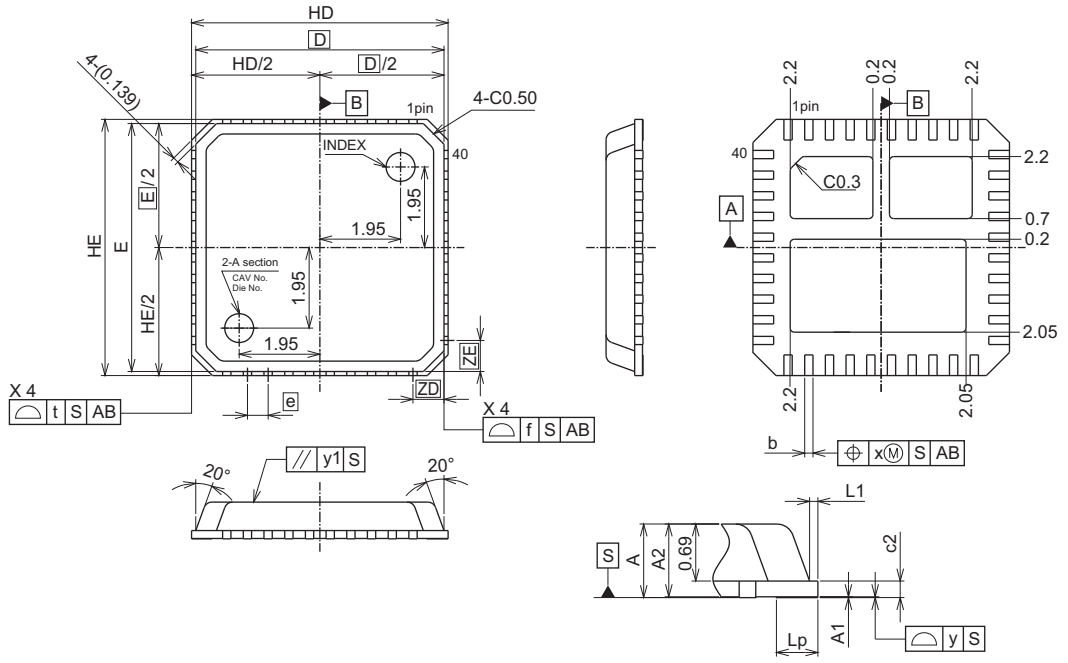


| Reference Symbol | Dimension in Millimeters | | |
|---|---|---|---|
| | Min | Nom | Max |
| D | 5.95 | 6.00 | 6.05 |
| E | 5.95 | 6.00 | 6.05 |
| A2 | 0.87 | 0.89 | 0.91 |
| f | — | — | 0.20 |
| A | 0.865 | 0.91 | 0.95 |
| A1 | 0.005 | 0.02 | 0.04 |
| b | 0.17 | 0.22 | 0.27 |
| b1 | 0.16 | 0.20 | 0.24 |
| e | — | 0.50 | — |
| Lp | 0.40 | 0.50 | 0.60 |
| x | — | — | 0.05 |
| y | — | — | 0.05 |
| y1 | — | — | 0.20 |
| t | — | — | 0.20 |
| HD | 6.15 | 6.20 | 6.25 |
| HE | 6.15 | 6.20 | 6.25 |
| ZD | — | 0.75 | — |
| ZE | — | 0.75 | — |
| L1 | 0.06 | 0.10 | 0.14 |
| c1 | 0.17 | 0.20 | 0.23 |
| c2 | 0.17 | 0.22 | 0.27 |

## Ordering Information

| Part Name | Quantity | Shipping Container |
|---|---|---|
| R2J20655BNP#G0 | 2500 pcs | Taping Reel |

# Notice

1. All information included in this document is current as of the date this document is issued. Such information, however, is subject to change without any prior notice. Before purchasing or using any Renesas Electronics products listed herein, please confirm the latest product information with a Renesas Electronics sales office. Also, please pay regular and careful attention to additional and different information to be disclosed by Renesas Electronics such as that disclosed through our website.
2. Renesas Electronics does not assume any liability for infringement of patents, copyrights, or other intellectual property rights of third parties by or arising from the use of Renesas Electronics products or technical information described in this document. No license, express, implied or otherwise, is granted hereby under any patents, copyrights or other intellectual property rights of Renesas Electronics or others.
3. You should not alter, modify, copy, or otherwise misappropriate any Renesas Electronics product, whether in whole or in part.
4. Descriptions of circuits, software and other related information in this document are provided only to illustrate the operation of semiconductor products and application examples. You are fully responsible for the incorporation of these circuits, software, and information in the design of your equipment. Renesas Electronics assumes no responsibility for any losses incurred by you or third parties arising from the use of these circuits, software, or information.
5. When exporting the products or technology described in this document, you should comply with the applicable export control laws and regulations and follow the procedures required by such laws and regulations. You should not use Renesas Electronics products or the technology described in this document for any purpose relating to military applications or use by the military, including but not limited to the development of weapons of mass destruction. Renesas Electronics products and technology may not be used for or incorporated into any products or systems whose manufacture, use, or sale is prohibited under any applicable domestic or foreign laws or regulations.
6. Renesas Electronics has used reasonable care in preparing the information included in this document, but Renesas Electronics does not warrant that such information is error free. Renesas Electronics assumes no liability whatsoever for any damages incurred by you resulting from errors in or omissions from the information included herein.
7. Renesas Electronics products are classified according to the following three quality grades: "Standard", "High Quality", and "Specific". The recommended applications for each Renesas Electronics product depends on the product's quality grade, as indicated below. You must check the quality grade of each Renesas Electronics product before using it in a particular application. You may not use any Renesas Electronics product for any application categorized as "Specific" without the prior written consent of Renesas Electronics. Further, you may not use any Renesas Electronics product for any application for which it is not intended without the prior written consent of Renesas Electronics. Renesas Electronics shall not be in any way liable for any damages or losses incurred by you or third parties arising from the use of any Renesas Electronics product for an application categorized as "Specific" or for which the product is not intended where you have failed to obtain the prior written consent of Renesas Electronics. The quality grade of each Renesas Electronics product is "Standard" unless otherwise expressly specified in a Renesas Electronics data sheets or data books, etc.
   "Standard": Computers; office equipment; communications equipment; test and measurement equipment; audio and visual equipment; home electronic appliances; machine tools; personal electronic equipment; and industrial robots.
   "High Quality": Transportation equipment (automobiles, trains, ships, etc.); traffic control systems; anti-disaster systems; anti-crime systems; safety equipment; and medical equipment not specifically designed for life support.
   "Specific": Aircraft; aerospace equipment; submersible repeaters; nuclear reactor control systems; medical equipment or systems for life support (e.g. artificial life support devices or systems), surgical implantations, or healthcare intervention (e.g. excision, etc.), and any other applications or purposes that pose a direct threat to human life.
8. You should use the Renesas Electronics products described in this document within the range specified by Renesas Electronics, especially with respect to the maximum rating, operating supply voltage range, movement power voltage range, heat radiation characteristics, installation and other product characteristics. Renesas Electronics shall have no liability for malfunctions or damages arising out of the use of Renesas Electronics products beyond such specified ranges.
9. Although Renesas Electronics endeavors to improve the quality and reliability of its products, semiconductor products have specific characteristics such as the occurrence of failure at a certain rate and malfunctions under certain use conditions. Further, Renesas Electronics products are not subject to radiation resistance design. Please be sure to implement safety measures to guard them against the possibility of physical injury, and injury or damage caused by fire in the event of the failure of a Renesas Electronics product, such as safety design for hardware and software including but not limited to redundancy, fire control and malfunction prevention, appropriate treatment for aging degradation or any other appropriate measures. Because the evaluation of microcomputer software alone is very difficult, please evaluate the safety of the final products or system manufactured by you.
10. Please contact a Renesas Electronics sales office for details as to environmental matters such as the environmental compatibility of each Renesas Electronics product. Please use Renesas Electronics products in compliance with all applicable laws and regulations that regulate the inclusion or use of controlled substances, including without limitation, the EU RoHS Directive. Renesas Electronics assumes no liability for damages or losses occurring as a result of your noncompliance with applicable laws and regulations.
11. This document may not be reproduced or duplicated, in any form, in whole or in part, without prior written consent of Renesas Electronics.
12. Please contact a Renesas Electronics sales office if you have any questions regarding the information contained in this document or Renesas Electronics products, or if you have any other inquiries.

(Note 1) "Renesas Electronics" as used in this document means Renesas Electronics Corporation and also includes its majority-owned subsidiaries.

(Note 2) "Renesas Electronics product(s)" means any product developed or manufactured by or for Renesas Electronics.



**SALES OFFICES** Renesas Electronics Corporation http://www.renesas.com

Refer to "http://www.renesas.com/" for the latest and detailed information.

**Renesas Electronics America Inc.**
2880 Scott Boulevard Santa Clara, CA 95050-2554, U.S.A.
Tel: +1-408-588-6000, Fax: +1-408-588-6130

**Renesas Electronics Canada Limited**
1101 Nicholson Road, Newmarket, Ontario L3Y 9C3, Canada
Tel: +1-905-898-5441, Fax: +1-905-898-3220

**Renesas Electronics Europe Limited**
Dukes Meadow, Millboard Road, Bourne End, Buckinghamshire, SL8 5FH, U.K
Tel: +44-1628-585-100, Fax: +44-1628-585-900

**Renesas Electronics Europe GmbH**
Arcadiastrasse 10, 40472 Düsseldorf, Germany
Tel: +49-211-65030, Fax: +49-211-6503-1327

**Renesas Electronics (China) Co., Ltd.**
7th Floor, Quantum Plaza, No.27 ZhiChunLu Haidian District, Beijing 100083, P.R.China
Tel: +86-10-8235-1155, Fax: +86-10-8235-7679

**Renesas Electronics (Shanghai) Co., Ltd.**
Unit 204, 205, AZIA Center, No.1233 Lujiazui Ring Rd., Pudong District, Shanghai 200120, China
Tel: +86-21-5877-1818, Fax: +86-21-6887-7858 / -7898

**Renesas Electronics Hong Kong Limited**
Unit 1601-1613, 16/F., Tower 2, Grand Century Place, 193 Prince Edward Road West, Mongkok, Kowloon, Hong Kong
Tel: +852-2886-9318, Fax: +852 2886-9022/9044

**Renesas Electronics Taiwan Co., Ltd.**
13F, No. 363, Fu Shing North Road, Taipei, Taiwan
Tel: +886-2-8175-9600, Fax: +886 2-8175-9670

**Renesas Electronics Singapore Pte. Ltd.**
1 harbourFront Avenue, #06-10, keppel Bay Tower, Singapore 098632
Tel: +65-6213-0200, Fax: +65-6278-8001

**Renesas Electronics Malaysia Sdn.Bhd.**
Unit 906, Block B, Menara Amcorp, Amcorp Trade Centre, No. 18, Jln Persiaran Barat, 46050 Petaling Jaya, Selangor Darul Ehsan, Malaysia
Tel: +60-3-7955-9390, Fax: +60-3-7955-9510

**Renesas Electronics Korea Co., Ltd.**
11F., Samik Lavied' or Bldg., 720-2 Yeoksam-Dong, Kangnam-Ku, Seoul 135-080, Korea
Tel: +82-2-558-3737, Fax: +82-2-558-5141



© 2011 Renesas Electronics Corporation. All rights reserved.



Colophon 1.1