PS232F

Version : A.001
Issue Date : 2008/08/21
File Name : SP-PS232F-A.001.doc
Total Pages : 11

6-Channel Secondary Monitoring IC

新竹市科學園區展業一路 9 號 7 樓之 1
SILICON TOUCH TECHNOLOGY INC.
9-7F-1, Prosperity Road I, Science Based Industrial Park,
Hsin-Chu, Taiwan 300, R.O.C.
Tel：886-3-5645656 Fax：886-3-5645626

PS232F

6-Channel Secondary Monitoring IC

General Description

PS232F is specially designed for switching power supply system. Four important functions of PS232F are the followings: over-voltage protection, over-current protection, under-voltage protection and power good signal generating.

OVP/UVP (Over-Voltage/Under-Voltage Protection) monitors 3.3V, 5V and quartic 12V to protect our power supply and PC, FPO/ goes to high when one of these supply voltages exceeds their normal operation voltage range.

OCP (Over Current Protection) monitors IS33, IS5, IS12A, IS12B, IS12C, IS12D input current sense. An adjustable over-current condition composed of Iref and “protection current range resistor” helps users design OCP easily.

An additional protection input pin provides the flexibility for design protection circuit.

Power good signal generating notifies personal computer when power supply is ready or power supply is going to shutdown, therefore it can provide a reliable power supply environment.

Features

- Over/Under-voltage protection and lock out
- Over-current protection and lock out
- Additional protection input
- Fault protection output with open drain output stage
- Open drain power good output signal for power good input
- Built-in 300mS power good delay
- AC on 75ms delay for UV/OC protection
- 38mS PSON/ control de-bounce
- Wide power supply range (3.8V~16V)
- Special care for AC power off

Block Diagram

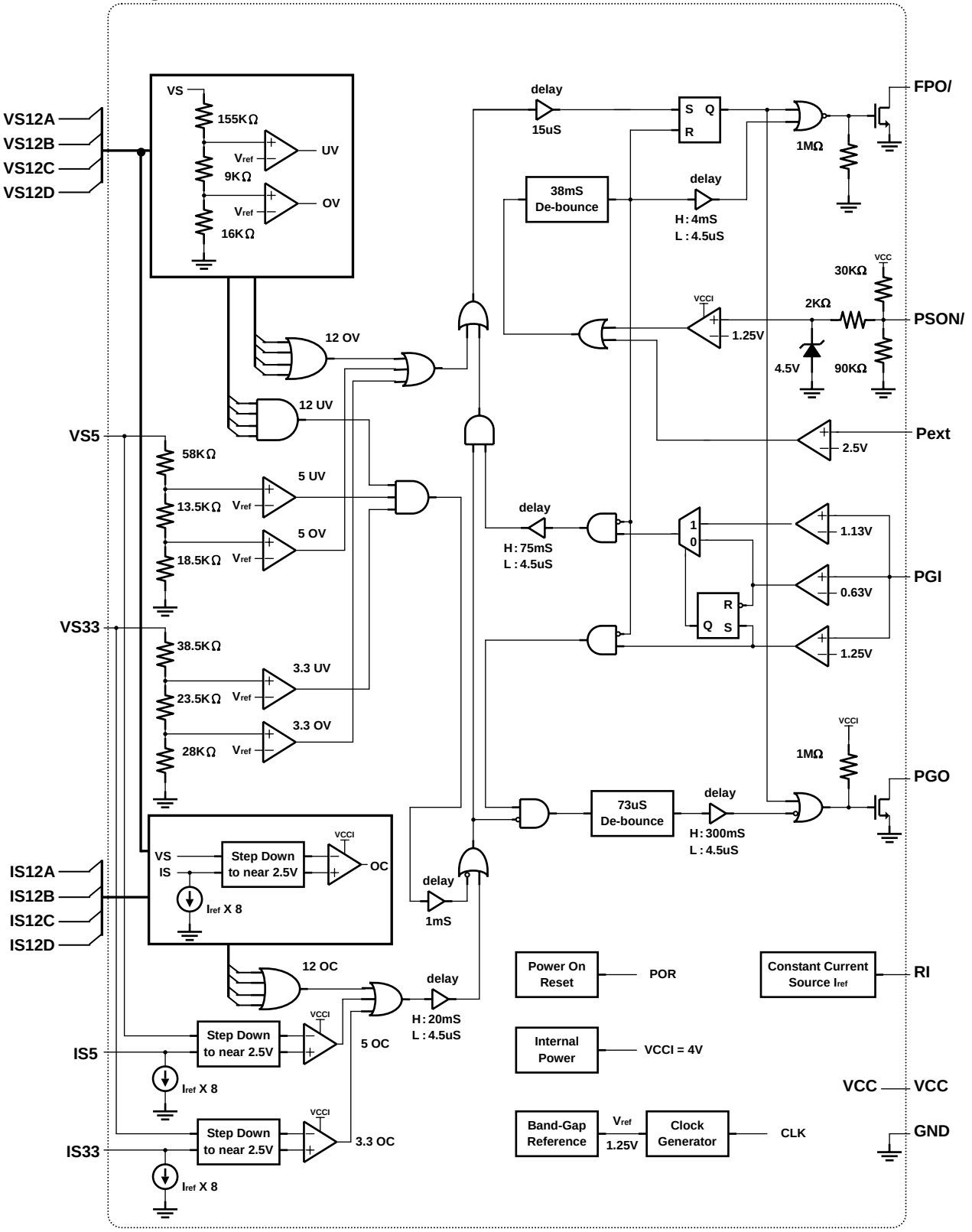

Timing Chart

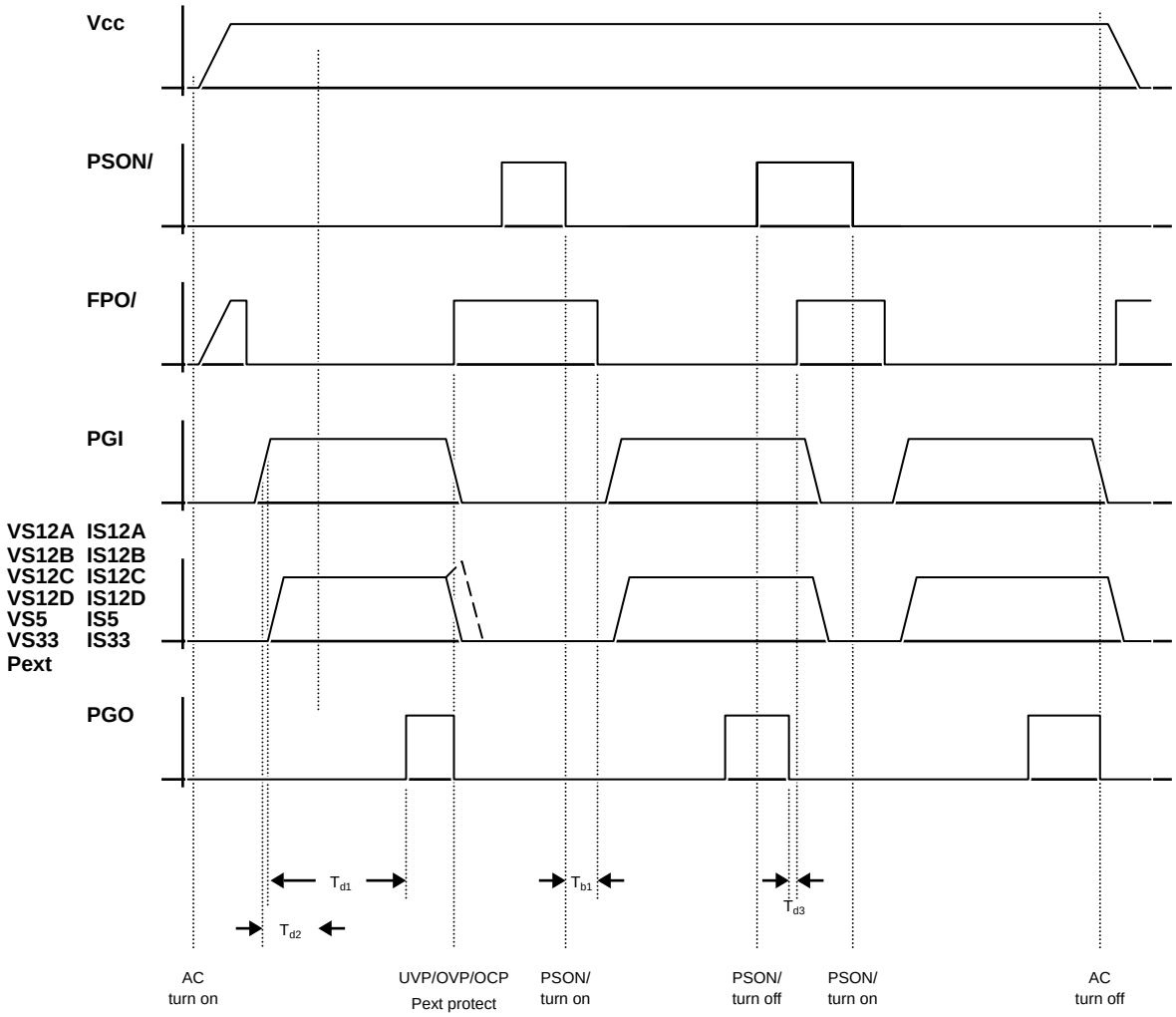

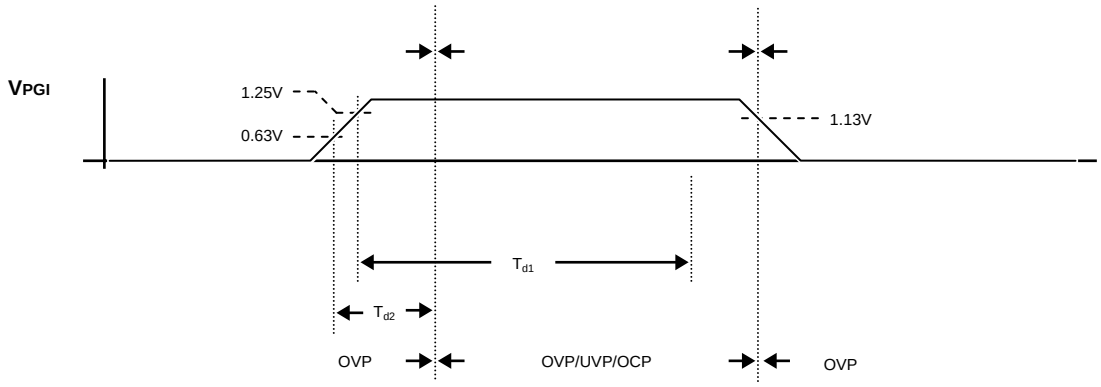

Pin Descriptions

Pin No	PIN NAME	Descriptions
1	PGI	Power good input signal pin
2	GND	Ground
3	FPO/	Inverted fault protection output ,open drain output stage
4	PSON/	Remote ON/OFF control input pin
5	IS12A	12V(1) over current protection input pin
6	RI	Current sense setting
7	IS12B	12V(2) over current protection input pin
8	VS12B	12V(2) over/under voltage protection input pin
9	VS12C	12V(3) over/under voltage protection input pin
10	VS12D	12V(4) over/under voltage protection input pin
11	IS12D	12V(4) over current protection input pin
12	IS12C	12V(3) over current protection input pin
13	Pext	External protection detect input pin
14	IS5	5.0V over current protection input pin
15	IS33	3.3V over current protection input pin
16	VS12A	12V(1) over/under voltage protection input pin
17	VS33	3.3V over/under voltage protection input pin
18	VS5	5.0V over/under voltage protection input pin
19	VCC	Power supply
20	PGO	Power good output signal pin , open drain output stage

Absolute Maximum Ratings

Parameter			Rating			Unit
Storage Temperature	(T_{stg})		-40	to	+125	°C
Operating Temperature	(T_{opr})		-30	to	+90	°C
Supply Voltage	(V_{CC})	VCC	-0.5	to	+16.0	V
Input Voltage Range	(V_I)	VS12,IS12(A,B,C,D)	-0.5	to	+16.0	V
		VS5, IS5	-0.5	to	+9.0	V
		VS33, IS33	-0.5	to	+7.0	V
		PGI	-0.5	to	+16.0	V
		PSON/, Pext	-0.5	to	Vcc+0.5	V
Output Voltage Range	(V_O)	FPO/	-0.5	to	+16.0	V
		PGO	-0.5	to	Vcc+0.5	V
Output Current for RI	(I_{RI})	RI	12.5	to	62.5	uA

Electrical Characteristics, Vcc=12V, T_a = 25°C. (unless otherwise specified)

Power Supply Section

Parameter	Conditions	MIN	TYP	MAX	Unit
Supply Voltage		3.8	5.0	16.0	V
Supply Current	$V_{PSON/}$ = 5V		4.5	5.0	mA
Power On Reset Threshold Voltage (V_{POR})		3.2	3.4	3.6	V
Power On Reset Hysteresis (V_{HYST})		-0.15	-0.3	-0.45	V

Over-Voltage Section

Parameter		Conditions	MIN	TYP	MAX	Unit
Over-Voltage Threshold	VS33		3.7	3.9	4.1	V
	VS5		5.7	6.1	6.5	V
	VS12A/B/C/D		13.1	13.8	14.5	V

Under-Voltage Section

Parameter		Conditions	MIN	TYP	MAX	Unit
Under-Voltage Threshold	VS33		2.0	2.2	2.4	V
	VS5		3.3	3.5	3.7	V
	VS12A/B/C/D		8.5	9.0	9.5	V

PGI, Analog Input

Parameter	Conditions	MIN	TYP	MAX	Unit
Threshold Voltage for start T_{d1}		1.16	1.25	1.33	V
Threshold Voltage for start T_{d2}		0.60	0.63	0.75	V
Threshold Voltage for mask OC,UV		1.05	1.13	1.21	V
Hysteresis (V_{HYST})*		+/-20	+/-50	+/-80	mV

*** All of the comparator for PGI input in block diagram.**

Electrical Characteristics (Continued)

PGO, Open Drain Digital Output

Parameter	Conditions	MIN	TYP	MAX	Unit
Leakage Current (I_{LKG})	V_{PGO}=5V			5	uA
Low Level Output Voltage (V_{OL})	I_{SINK}=10mA			0.3	V

FPO/, Open Drain Digital Output

Parameter	Conditions	MIN	TYP	MAX	Unit
Leakage Current (I_{LKG})	$V_{FPO/}$=5V			5	uA
Low Level Output Voltage (V_{OL})	I_{SINK}=20mA			0.4	V

PSON/, Analog Input

Parameter	Conditions	MIN	TYP	MAX	Unit
Threshold Voltage (High)		1.60			V
Threshold Voltage (Low)				0.75	V

External Protection Detect Section

Parameter	Conditions	MIN	TYP	MAX	Unit
Threshold(V_{TH})		2.5	2.6	2.7	V
Hysteresis (V_{HYST})		+/-20	+/-50	+/-80	mV

Switching Characteristics, Vcc=12V, T_a = 25˚C.

Parameter	Conditions	MIN	TYP	MAX	Unit
PGI to PGO Delay Time (T_{d1})		200	300	480	mS
Short Circuit Delay Time (T_{d2})		49	75	114	mS
PGO to FPO/ Delay Time (T_{d3})		2	4	6	mS
Under Voltage Delay Time (T_{d4})		0.6	1	1.4	mS
Over Current Delay Time (T_{d5})		13	20	27	mS
Over Voltage Delay Time (T_{d6})		5	15	25	uS
Pext Delay Time (T_{d7})		24	38	52	mS
PSON/ De-bounce Time (T_{b1})		24	38	52	mS
PGO Noise De-glitch Time (T_{b2})		47	73	110	uS

Application

Typical 6 rails SPS

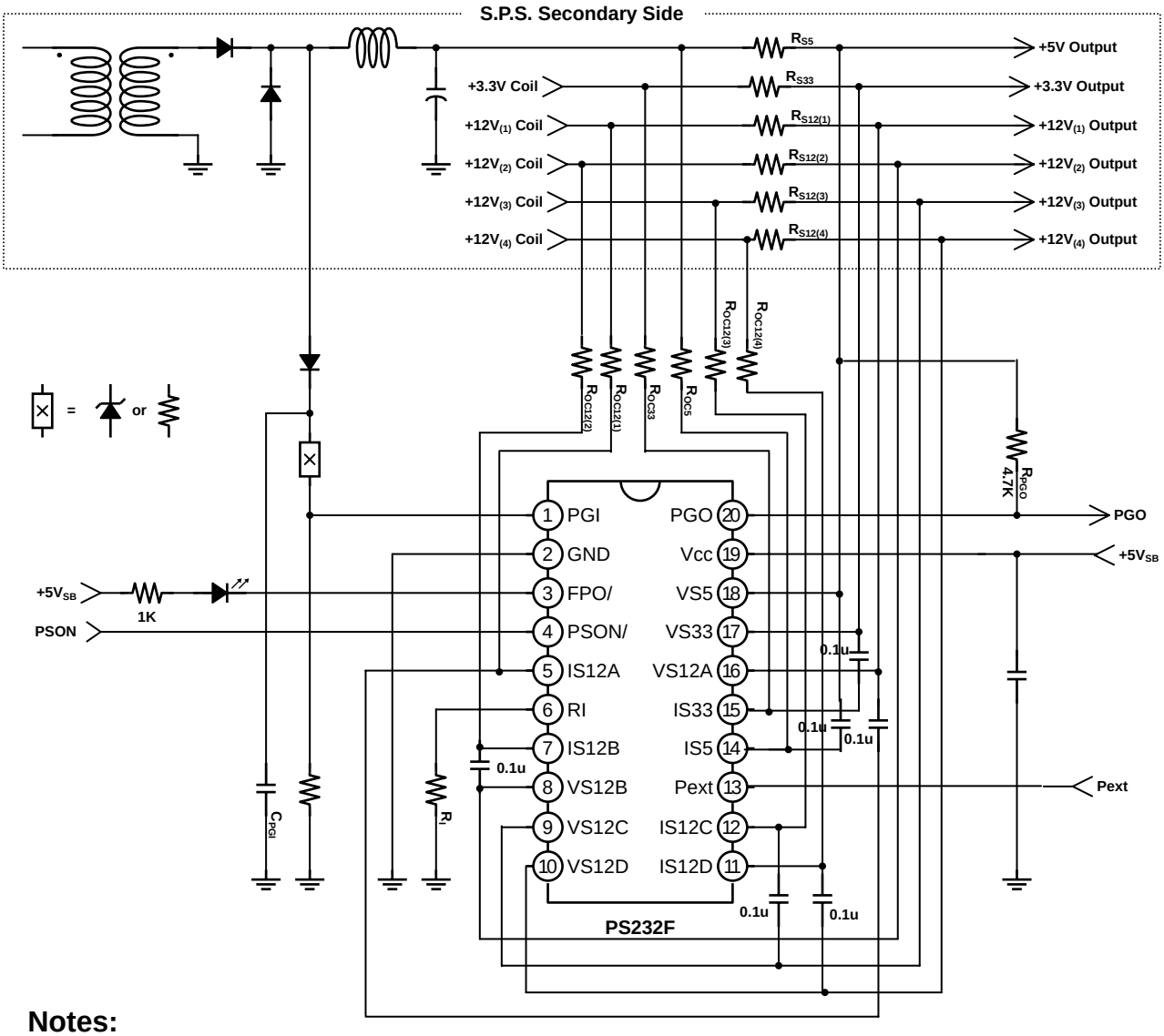

Notes:

1. Zener diode or resistor or both of them can be used in component X.
2. The bypass capacitor C_{by} suggests to be 0.1uF~ 10uF and layout nearby pin VCC.
3. The recommend sense values of $R_{S12(1)}$, $R_{S12(2)}$, R_{S5} and R_{S33} are $\geq 0.002\Omega$.
4. Over-Current Protection design example:

   (1) $I_{ref} = 20\mu A$, $R_I = \frac{V_{RI}}{I_{RI}} = \frac{1.25}{20\mu} = 62.5K(\Omega)$

   (2) R_{S5}=0.002Ω, $\Delta V_{5V} = 0.002 \times I_{+5V} = R_{OC5} \times 8 \times I_{ref}$

   (3) If +5V OCP trip point is 20A, $R_{OC5} = \frac{0.002 \times 20}{8 \times 20\mu} = 250(\Omega)$

Package Specification

(20-pin DIP)

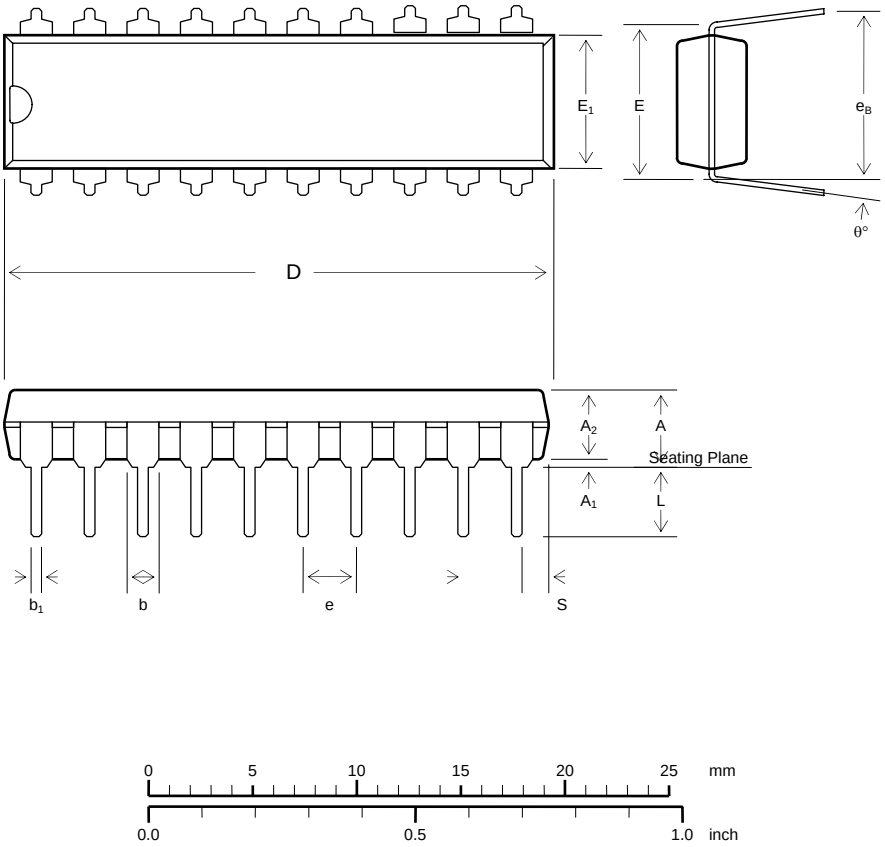

Symbol	Dimension in mm			Dimension in inch			NOTE
	Min	Normal	Max	Min	Normal	Max	
A			5.334			0.210	
A_1	0.381			0.015			
A_2	3.175	3.302	3.429	0.125	0.13	0.135	
b			1.626			0.064	
b_1	0.400		0.560	0.016		0.022	
D			26.416			1.040	
E		7.620			0.300		
E_1	6.223		7.000	0.245		0.276	
e	2.286		2.794	0.090		0.110	
E_B	8.509	9.017	9.525	0.335	0.355	0.375	
L	2.540		3.556	0.100		0.132	
S			1.905			0.075	
θ°	0		15	0		15	

Package Specification

(20-pin SOP)

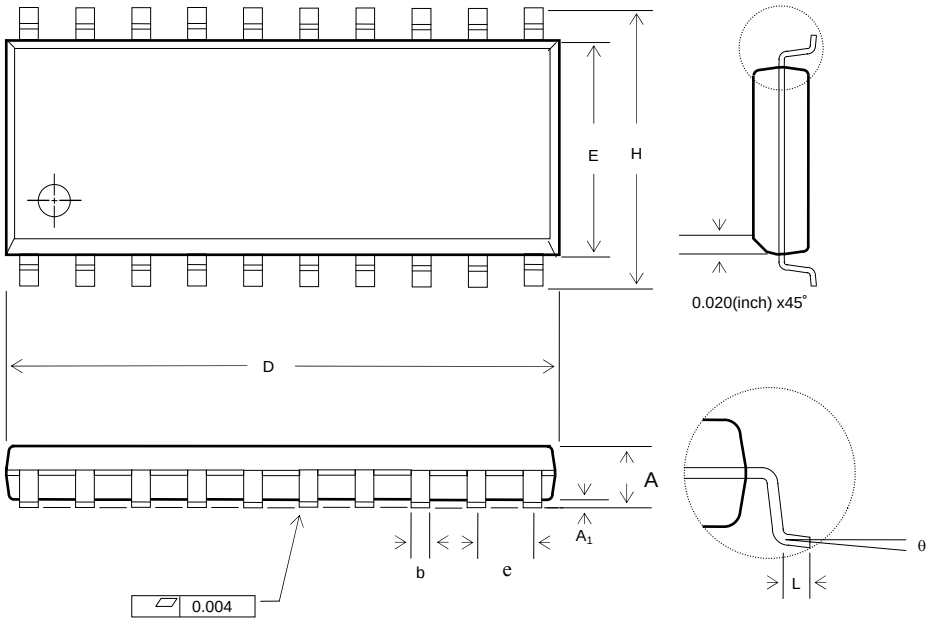

Symbol	Dimension in mm		Dimension in inch		NOTE
	MIN.	MAX.	MIN.	MAX.	
A	2.362	2.642	0.093	0.104	
A_1	0.102	0.305	0.004	0.012	
b	0.406BSC		0.016BSC		
e	1.270BSC		0.050BSC		
D	12.598	12.903	0.496	0.508	
H	10.008	10.643	0.394	0.419	
E	7.391	7.595	0.291	0.299	
L	0.406	1.270	0.016	0.050	
θ	0°	8°	0°	8°	

The products listed herein are designed for ordinary electronic applications, such as electrical appliances, audio-visual equipment, communications devices and so on. Hence, it is advisable that the devices should not be used in medical instruments, surgical implants, aerospace machinery, nuclear power control systems, disaster/crime-prevention equipment and the like. Misusing those products may directly or indirectly endanger human life, or cause injury and property loss.

Silicon Touch Technology, Inc. will not take any responsibilities regarding the misusage of the products mentioned above. Anyone who purchases any products described herein with the above-mentioned intention or with such misused applications should accept full responsibility and indemnify. Silicon Touch Technology, Inc. and its distributors and all their officers and employees shall defend jointly and severally against any and all claims and litigation and all damages, cost and expenses associated with such intention and manipulation.

Silicon Touch Technology, Inc. reserve the right to make changes to their products or to discontinue any product or service without notice, and advise customers to obtain the latest version of relevant information to verify, before placing orders, that information being relied on is current and complete.